USER MANUAL

GUIDELINES & STANDARDS FOR LAND USE NEAR STREAMS

A Manual of Tools, Standards and Procedures to Protect Streams and Streamside Resources in Santa Clara County

Prepared by the Santa Clara Valley Water Resources Protection Collaborative

August, 2005
Revised July 2006

SANTA CLARA VALLEY WATER RESOURCES PROTECTION COLLABORATIVE

Santa Clara Valley Water District
City of Campbell
City of Cupertino
City of Gilroy
City of Los Altos
Town of Los Altos Hills
Town of Los Gatos
City of Milpitas
City of Monte Sereno
City of Morgan Hill
City of Mountain View
City of Palo Alto
City of San José
City of Santa Clara
County of Santa Clara
City of Saratoga
City of Sunnyvale
Guadalupe-Coyote Resource Conservation District
Santa Clara County Farm Bureau
Silicon Valley Manufacturing Group
Home Builders Association of Northern California
San Jose Silicon Valley Chamber of Commerce
CLEAN South Bay
The Leagues of Women Voters of Santa Clara County
Santa Clara Valley Audubon Society
Families for Fair Government

Cover photo by: Santa Clara Basin Watershed Management Initiative

Stanley M. Williams
Chief Executive Officer
Santa Clara Valley Water District

Sharon Fierro
Community Development Director
City of Campbell

Henry Louie
City Engineer/ Public Works Director
Town of Los Altos Hills

Carl Cahill
Planning Director
Town of Los Altos Hills

Tambri Heyden
Planning Manager
City of Milpitas

Cathy R. Lazarus
Director of Public Works
City of Mountain View

Carl Mosher
Director of Environmental Services
City of San Jose

James M. Fiedler
Chief Operating Officer
Santa Clara Valley Water District

Ralph Qualls
Public Works Director
City of Cupertino

James Porter
Director of Public Works
City of Los Altos

John E. Curtis
Director of Parks and Public Works
Town of Los Gatos

Gordon Siebert
Director of Public Works/City Engineer
City of Monte Sereno

Glenn Roberts
Public Works Director
City of Palo Alto

Laurel Prevetti
Deputy Director, Department of Planning, Building and Code Enforcement
City of San Jose

Marc Klemencic
Deputy Operating Officer
Santa Clara Valley Water District

Rick Smelser
City Engineer
City of Gilroy

Carl Cahill
Planning Director
Town of Los Altos Hills

David M. (Mike) McNeely
City Engineer
City of Milpitas

Jim Ashcraft
Public Works Director
City of Morgan Hill

July Caporgno
Advance Planning Manager
City of Palo Alto

Rajeev Batra
City Engineer
City of Santa Clara

Ann Draper
Assistant Operating Officer
Santa Clara Valley Water District

Barbara Keegan
Assistant Director of Public Works
City of Sunnyvale

Jenny Derry
Executive Director
Santa Clara County Farm Bureau

James I. Tucker
Vice President
San Jose Silicon Valley Chamber of Commerce

Brenda Torres-Barreto
Executive Director
Santa Clara Valley Audubon Society

John Cherbone
Public Works Director
City of Saratoga

Bill Shoe
Principal Planner
County of Santa Clara

Trudi Ryan
Planning Officer
City of Sunnyvale

Shin-Roei Lee
So Bay Watershed Management Division
SF Bay Regional Water Quality Control Board

Margaret V. Bruce
Director of Environmental Programs
Silicon Valley Manufacturing Group

Trish Mulvey
Co-Founder
CLEAN South Bay

Michael Houlihan
Families for Fair Government

Lawrence Johnmann
Board Member
Guadalupe-Coyote Resource Conservation District

Beverly Bryant
Home Builders Association of Northern California

Ann Coombs
The League of Women Voters of Santa Clara County

Acknowledgements

Project Management/Technical Staff

SCVWD

Luis C. Jaimes, P.E.
Senior Project Manager

Sue A. Tippets, P.E.
Engineering Unit Manager

CONCUR, Inc.

John Gamman
Principal

Rebecca Bryson
Associate Mediator

SCVWD Contributing Staff

Graphics

Joy O. Lim
Kate Vernon
Nicole Antolin
Tracy Broadway
Ardy Ghoreishi

Reprographics

Jim Armstrong
Hector Fuentes
Ron Callaway

GIS Support

Jerry Cox
Randy Mullen

CONTENTS

Chapter 1 - Introduction		Pages
1A.	General Introduction to the Guidelines and Standards for Land Use Near Streams (Guidelines and Standards)	1.1
1B.	Contents of the Proposed Guidelines and Standards	1.1
1C.	Application of the Guidelines and Standards	1.2
1D.	Purpose and Contents of the Users Manual	1.2
1E.	Quick Reference Guide to this Manual: Guidance for Streamside Permit Applicants	1.3
Chapter 2 – Permitting Tools for Guidelines and Standards		
2A.	Introduction to the Permitting Tools for Guidelines and Standards	2.1
2B.	Streamside Permit Review Process Flow Chart	2.5
2C.	List of Exempt Land Use Activities	2.7
2D.	Designation of Streamside Review Area	2.9
2E.	Definition of a Stream	2.11
2F.	Criteria to Identify or Verify a Watercourse as a Stream	2.13
2G.	Definition of Top of Bank	2.15
2H.	Streamside Resource Protection Questions	2.17
2I.	Streamside Resource Protection Questions for Single Family Units (SFU)	2.23
2J.	Information to be Included on Plans for Streamside Development	2.29
2K.	Resource Agency Referrals for Streamside Development	2.31
2L.	Construction-related Permit Conditions for Streamside Permits	2.33
Chapter 3 – Guidelines and Standards for Land Use Near Streams		
3A.	Preamble and Introduction to the Guidelines and Standards	3.1
3B.	Guidelines and Standards for Land Use Near Streams	3.3
Chapter 4 - Design Guides for Guidelines and Standards		
4A.	Introduction to the Design Guides	4.2
4B.	Design Guides	4.3
Chapter 5 – Guidance for Homeowners		
5A.	How to Plan Your Streamside Project	5.1
5B.	Why Consider Local Stream Resources When Building or Remodeling Your Home?	5.1
5C.	What Permits Do I Need?	5.2
5D.	How to Use the Streamside Permitting Tools and Guidelines and Standards	5.3
5E.	Step-by-Step Process for Using the Permitting Tools	5.3

5F. Slope Stability Protection Area for Single-Family Homes 5.4
5G. Best Management Practices for Single-Family Homes 5.5
5H. Technical Assistance 5.7
5I. Related Information and Programs for Stream Stewardship 5.7

Chapter 6 – Guidance for Developers

6A. How to Plan Your Streamside Project 6.1
6B. The Importance of Protecting and Managing Local Streams 6.1
6C. Benefits of Integrating Streams into Your Site Plans 6.1
6D. Base Your Site Plan on Local Stream Resource Conditions 6.2
6E. The Guidelines and Standards for Land Use Near Streams 6.3
6F. Goals of the Guidelines and Standards and Permitting Tools 6.3
6G. Project Planning Tips 6.3
6H. How to Use the Streamside Permitting Tools and The Guidelines and Standards 6.5
6I. Permits and Technical Assistance from the Santa Clara Valley Water District (SCVVWD) 6.6
6J. Permits and Guidance by State and/or Federal Regulatory Agencies 6.6
6K. Streamside Planning: How Using Alternative Street Designs Can Preserve Natural Streams and Enhance Streamside Developments 6.7

Chapter 7 – Model Enhanced Practices

7A. Introduction to Model Enhanced Practices 7.1
7B. Model Enhanced Practices 7.2

Chapter 8 – Santa Clara Valley Water District Ordinance 83-2

8A. Introduction and Background 8.1
8B. SCVWD Ordinance 83-2 8.1
8C. SCVWD Permit Jurisdiction 8.2
8D. SCVWD Permit Process 8.3
8E. Revision of Ordinance 83-2 8.3
8F. Text of Ordinance 83-2 8.4

Chapter 9 – GIS Mapping Tool to Support Water Resource Protection

9A. Introduction to the GIS Mapping Tool 9.1
9B. Instructions on How to Use the Mapping Tool 9.2
9C. Next Steps for Website Development 9.4

Chapter 10 – Bibliography 10.1

Chapter 11 – Glossary of Key Terms 11.1

Appendix A: Frequently Asked Questions About Guidelines and Standards A.1

Appendix B: Detailed Guidelines and Standards B.1

Appendix C: Slope Stability Requirements for Single-Family Units on Streamside Properties C.1

CHAPTER 1

INTRODUCTION

1A. GENERAL INTRODUCTION TO THE GUIDELINES AND STANDARDS FOR LAND USE NEAR STREAMS

This User's Manual has been developed to provide essential information to local permitting agencies, homeowners, and developers about the requirements and procedures related to the Proposed Guidelines and Standards for Land Use Near Streams (Guidelines and Standards) in Santa Clara County. The Guidelines and Standards have been developed as part of a cooperative decision-making process known as the Santa Clara Valley Water Resources Protection Collaborative (Collaborative). All of the cities, the County, the Santa Clara Valley Water District, citizen, business, agriculture and community groups in Santa Clara County are members of the Collaborative.

In 2003, these organizations joined as the Collaborative with the goals of:

1. **Identifying and addressing typical issues associated with development next to streams;**
2. **Developing clear, consistent guidance to property owners and developers about how to design and construct streamside development projects in a way that protects streams and streamside resources;**
3. **Clarifying and streamlining the permitting process for streamside property owners throughout the County; and**
4. **Developing Guidelines and Standards for streamside developments that focus on local control of the permitting process for these lands.**

By working together to protect streams and streamside resources, both property owners and local communities will benefit from healthier streams and riparian resources, reduced erosion, more safety for streamside residents and structures, improved flood protection and water quality, and, in many instances, increased property values if trees and streamside amenities are left intact or enhanced.

A river is the report card for its watershed.

-Alan Levere, Connecticut Department of Environmental Protection, 2000

1B. CONTENTS OF THE PROPOSED GUIDELINES AND STANDARDS FOR LAND USE NEAR STREAMS

The Guidelines and Standards are designed to address land use activities near streams and to protect surface and groundwater

Photo Courtesy of Urban Advantage

quality and quantity in Santa Clara County. They are based on a recent compilation of the existing practices the Santa Clara Valley Water District (SCVWD) uses when reviewing permits for land uses near streams under its current requirements based on Ordinance 83-2. Each Guideline and Standard is tied to a specific land use activity (i.e., structures built near channels, encroachments, grading and drainage, erosion repair, etc.).

The Guidelines and Standards are intended to be used for the purposes of development review of proposed land use activities for new development, major redevelopment and where appropriate, single family units. In developing the Guidelines and Standards, the Collaborative has considered how to make them realistic, implementable, and easy to administer. They are designed to ensure that single family property owners are not unduly burdened by extensive or expensive permit requirements.

Finally, the Guidelines and Standards are intended to compliment existing regulations, such as the City/County/SCVWD National Pollutant Discharge Elimination System (NPDES) Permitting Program provisions, which address some related water quality issues. It is assumed that each jurisdiction will also continue to follow these and other existing regulations that protect streams and/or surface water quality.

1C. APPLICATION OF THE GUIDELINES AND STANDARDS

Each city, the County and SCVWD all have slightly different permitting processes, and based on these, will implement the Guidelines and Standards and related Permitting Tools in ways that reflect each communities' permit, building and planning processes. To ensure that the permitting processes remain clear, consistent and fair, there will be an 18 month transition period, starting in September 2005 and ending in February 2007, as the cities, the County, and SCVWD evaluate how best to incorporate these practices and commence to apply them to local streamside land use activities. By early 2006, the Santa Clara Valley Water District plans to incorporate the Guidelines and Standards into an ordinance which replaces existing Ordinance 83-2.

By February 2007, each city and the County will choose how it wants to integrate the Guidelines and Standards into its existing processes and what level of responsibility it wants to assume in permitting land use activities in and near streams. The SCVWD will keep its permit authority for activities within its right-of-way.

1D. PURPOSE AND CONTENTS OF THE USER MANUAL

This User Manual is designed to provide in one location a list of the Guidelines and Standards, copies of the model Permitting Tools that outline the types of information that will be required in the permitting process, as well as specific guidance for homeowners and developers.

The specific sections of this User's Manual are listed below:

Chapter 1 - *Introduction*

Chapter 2 – *Permitting Tools for Guidelines and Standards*

Chapter 3 – *Guidelines and Standards for Land Use Near Streams*

Chapter 4 – *Design Guides for the Guidelines and Standards for Land Use Near Streams*

Chapter 5 – *Guidance for Homeowners*

Chapter 6 – *Guidance for Developers*

Chapter 7 – *Model Enhanced Practices*

Chapter 8 – *SCVWD Ordinance 83-2*

Chapter 9 – *GIS Mapping Tool to Support Stream Protection*

We hope you find this User Manual useful. If you have questions related to its use or contents, please contact your local planning or public works department or the Community Projects Review Unit at the Santa Clara Valley Water District.

1E. QUICK REFERENCE GUIDE TO THIS MANUAL

IF YOU ARE . . .	THEN . . .
Wondering how best to use the User Manual...	Read this Easy Reference Guide. The User Manual is targeted to a diverse audience of planners, designers, engineers, decision makers, and citizens. It can be used in a variety of ways. For more information please call the Planning or Public Works department in your local jurisdiction. For additional information, you may also contact the Santa Clara Valley Water District at (408) 265-2607, ext. 2258.
Working for a local government agency that has a role in reviewing and approving projects for land use near streams	Read Chapter 3 to understand the Guidelines and Standards, and Chapter 2 for information on related Permitting Tools. In addition, please read Chapter 9 to find out how to use the web-based GIS Mapping Tool to help you in reviewing streamside projects.
A developer considering how to integrate stream protection measures into your project plans...	Read the Guidance for Developers in Chapter 6. Read Chapters 3 for information on specific Guidelines and Standards, and Chapter 7 to find out ways to integrate Model Enhanced Practices into your project. Also, Chapter 9 provides you information on how to access and use a web-based GIS Mapping Tool to learn more about water resource protection issues related to your property.
An engineer or architect developing plans for a project near a stream...	Review the Guidelines and Standards in Chapter 3, and use the Design Guides in Chapter 4. Also, read the Model Enhanced Practices in Chapter 7, and information on how to access and use a web-based GIS Mapping Tool in Chapter 9.
A homeowner concerned about the stream on or near your property...	Read the Guidance for Homeowners in Chapter 5, including Best Management Practices. Also, please look over the Introduction to the Guidelines and Standards (G&S's) in Chapter 3 to learn more about any specific G&S's that may apply to your particular project. In addition, please read Chapter 5 to find out how you may be able to incorporate Model Enhanced Practices into your project. Finally, please consult Chapter 9 to learn how you can access and use a web-based GIS Mapping Tool to learn more about water resource protection issues related to your property.
Curious about best practices and the benefits of integrating land use planning and stream stewardship...	Read Chapter 7 to learn more about Model Enhanced Practices.

CHAPTER 2

PERMITTING TOOLS FOR THE GUIDELINES AND STANDARDS

2A. INTRODUCTION TO THE PERMITTING TOOLS FOR THE GUIDELINES AND STANDARDS

This chapter contains the Permitting Tools that accompany the Guidelines and Standards for Land Use Near Streams.

The purpose of the Permitting Tools is to:

1. **Promote permit streamlining;**
2. **Provide clarity and consistency in how permits are processed;**
3. **Promote ease of implementation of the Guidelines and Standards for Land Use Near Streams;**
4. **Provide information about streams and streamside resources;**
5. **Provide opportunities for integrating this information into plans for development in a way that protects and preserves streams and streamside resources.**

HOW THE PERMITTING TOOLS WERE DEVELOPED

Representatives from the permitting agencies that serve on the Santa Clara Valley Water Resources Protection Collaborative, including the 15 cities in the Santa Clara County, the County, the Santa Clara Valley Water District (SCVWD) and other Collaborative members representing business, industry, homeowners, environmental and agriculture interests, worked for over a year to develop the Permitting Tools. The Permitting Tools are considered an essential companion to the Guidelines and Standards process. The Permitting Tools were developed with these users in mind:

- **Permitting Agencies**
- **Homeowners**
- **Developers**

Preserving and enhancing the watershed will require changes to the spatial structure of land use in the Basin, from one continuous swath of urbanized land to a more fine-grained pattern characterized by more intensely urbanized areas that are interstitial to broad, continuous stream corridors.

—Santa Clara Basin Watershed Management Initiative, Watershed Action Plan, 2003

HOW PERMITTING AGENCIES WILL USE THE PERMITTING TOOLS

Some permitting agencies (ie. the cities, the County and the SCVWD) will adopt and use the Permitting Tools in the same format as they appear in this chapter, while some agencies will modify the Tools to fit into their existing permit procedures. For example, some agencies will integrate the content of the Tools into existing permit intake questionnaires, CEQA checklists, etc., rather than using them as stand-alone documents. Whether or not your permitting agencies uses the Tools exactly as they appear, or have elected to excerpt relevant portions to integrate into their existing permit materials, it will benefit all permit applicants to use the Tools in this chapter to gather necessary information and prepare related materials (ie. project site plans) which integrate the protection of streams and streamside resources into development plans.

HOW TO USE THE PERMITTING TOOLS

The Permitting Tools, and suggestions for how and when to use them, are as follows:

- **Streamside Permit Review Process Flow Chart:** a graphic summary listing all of the Permitting Tools on one page, the suggested sequence for using them and how they relate to other steps in the permit process. It also includes tips for when to time a field visit and when to meet with agencies to discuss preliminary development plans.

- **List of Exemptions for Land Use Activities:** a summary of specific land use activities that are exempt from the Guidelines and Standards.

- **Designation of Streamside Review Area:** helps determine if a parcel is subject to the Guidelines and Standards, namely, if a parcel abuts "or is in proximity of a stream including all properties located within 50 feet from the top of stream bank."

- **Definition of a Stream:** summarizes different ways in which a watercourse is defined as a stream.

- **Criteria to Identify or Verify a Watercourse as a Stream:** summarizes a simple step-by-step way of identifying or verifying the presence of a stream.

- **Definition of Top of Bank:** summarizes how to locate and find the top of a streambank, which is used to measure certain requirements in the Guidelines and Standards. Includes sample illustrations showing different types of Top of Bank.

- **Streamside Resource Protection Questions:** a standardized set of questions to allow an applicant and permit agency to gather important information about site and stream resource conditions to consider when planning and evaluating a project.

- **Streamside Resource Protection Questions for Single Family Units:** a simpler version of the standardized questions to allow an applicant and permit agency to gather important information about site and stream resource conditions to consider when planning and evaluating a new or remodeled single-family unit.

- **Information to be Included on Plans for Streamside Development:** a summary of the type of stream-related information to be included on plans for streamside development, such as a Site Plan. Much of this information is derived from the answers provided when filling out the Streamside Resource Protection Questions.

- **Resource Agency Referrals for Streamside Development:** a summary of the different regional, state and Federal agencies which may require a separate permit for planned improvements to a stream or streamside parcel. Includes the types of issues which may trigger these permits and how to contact each agency.

- **Construction-related Permit Conditions for Streamside Permits:** a standardized list of typical permit conditions needed to protect streams and streamside resources during the construction phase of a project.

Note: The Permitting Tools for the Guidelines and Standards appear next, starting with the Flow Chart. Each Tool starts on a new page.

2B. STREAMSIDE PERMIT REVIEW PROCESS FLOW CHART

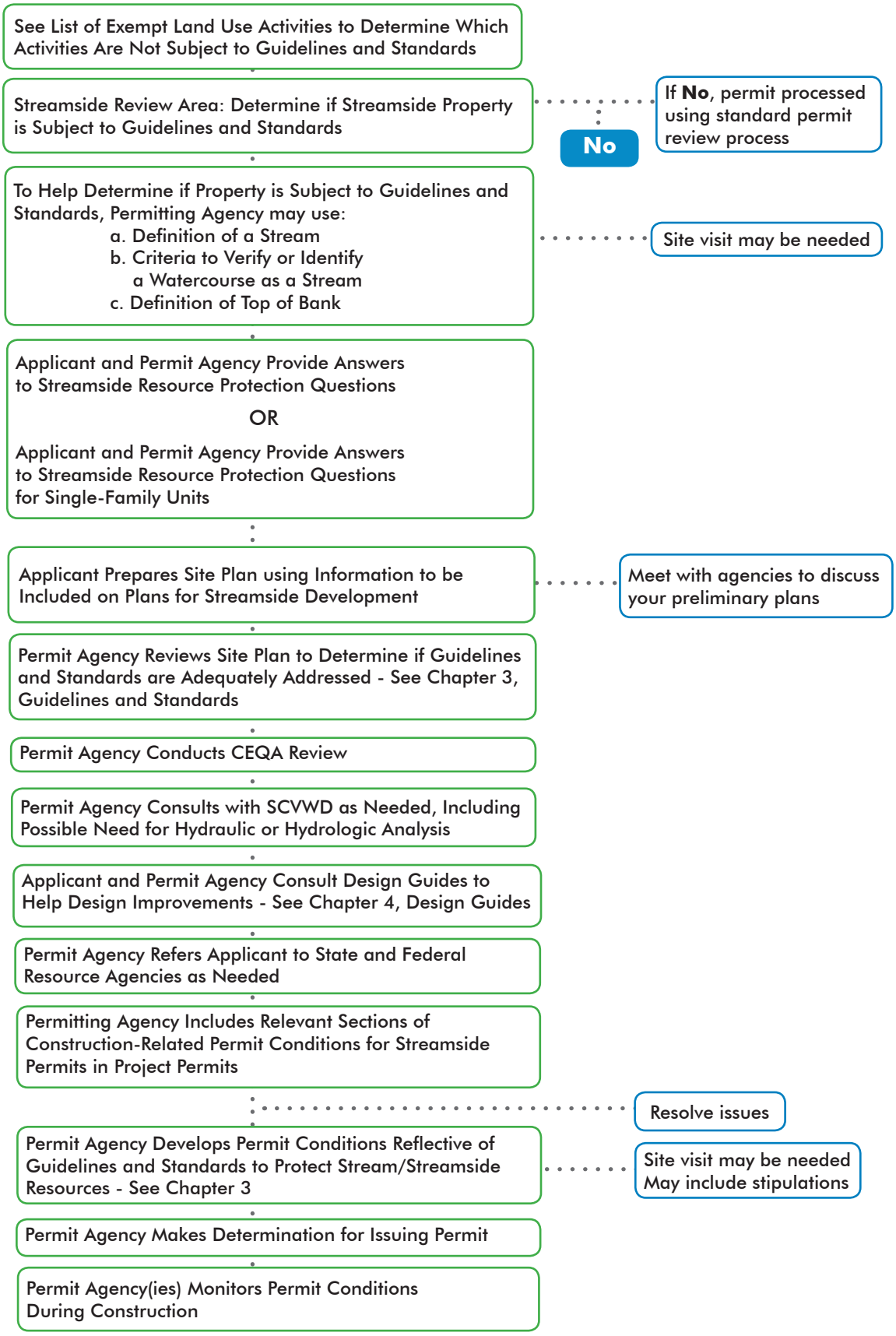

2C. LIST OF EXEMPT LAND USE ACTIVITIES

(Ratified by Collaborative July 22, 2004)

INTRODUCTION

The following land use activities are exempt from the Guidelines and Standards for Land Use Near Streams.[1] These activities may require a local building permit, and should not be located in a stream channel.

a. Less then 3 cubic yards of earthwork, or

b. Interior building construction and alterations, or

c. Erection of storage buildings not greater than 120 sq. ft., or

d. Replacement of sewer or water laterals, or

e. Re-roofing, or

f. Wood fences six feet in height or less,

or

g. Exterior decks less or equal to 30" above grade.

Interior construction (b), replacement of sewer laterals (d), and re-roofing (e) are subject to local building permit requirements. In most jurisdictions minor grading (a), small storage buildings (c), fencing (f) and low decks are not subject to building permits. However, if you do plan on adding a storage shed, a fence or a deck, please consider how to design, site and build them in a manner that causes the least disruption to the stream and streamside resources. Decks should not overhang or extend beyond the creek bank. Fences should also be set back from the top of the bank.

[1] For jurisdictions where Single-Family Ünits are approved with no descretionary review, remodels of existing SFU's in residential zones on parcels 10,000 sq. ft. or less may be exempt.

2D. DESIGNATION OF STREAMSIDE REVIEW AREA

(Ratified by Collaborative June 24, 2004)

Purpose

The purpose of designating a Streamside Protection Area is to establish a permit review 'trigger' when land use changes are considered near streams. This 'trigger' would be a mechanism to identify stream resources which may require protection. This 'trigger' will be part of each permitting agencies land use permit review process. This Streamside Protection Area 'trigger'' is defined as follows:

> **"The Streamside Protection Area shall include all properties abutting or in proximity to a stream, including all properties located within 50 ft. from the top of bank".** [2]

Database and Mapped Information

A computerized database has been provided to each permitting agency by the SCVWD. It includes every parcel abutting each stream in the County. Permitting agencies can use this database to determine if a specific parcel(s) fall within the Streamside Protection Area. This database also includes Assessor Parcel Numbers for District right of ways and easements. In addition, the District has provided each permitting agency with maps showing parcels abutting District right of ways. All of this information will be useful to permitting agencies when they review permit applications for land use changes near streams. SCVWD has developed a GIS Mapping Tool to support Water Resource Protection. Please see Chapter 9 for more information on how to use the Mapping Tool.

[1] Refer to separate Definition of Top of Bank

2E. DEFINITION OF A STREAM

(Ratified by Collaborative July 22, 2004)

INTRODUCTION

The following definition of a stream has been developed to aid in the identification of stream resources that are subject to the Guidelines and Standards for Land Use near Streams.

A Stream is a body of water that flows at least periodically or intermittently through a bed or channel having banks. This may include watercourses having a surface or subsurface flow that supports or has supported riparian vegetation, fish or other aquatic life.

The presence of a stream is often shown as follows:[1]

1. As designated by a solid line or dash and three dots symbol on the largest scale of the USGS maps most recently published or any replacement to that symbol; or,
2. As designated by the Santa Clara Valley Water District as shown on maps maintained by the District; or,
3. As designated on the most recent maps of Santa Clara County and cities within Santa Clara County; or,
4. On a site plan which may be required by a permitting agency using the *Criteria to Verify or Identify a Watercourse as a Stream*.

An alteration to a natural watercourse such as the construction of culverts or other improvements within the bed of the stream does not affect its status as a natural watercourse. Streams do not include features such as street gutters and asphalt or concrete ditches which drain paved parking lots.

A watercourse, which does not meet the above definitions, may be considered a stream if the director of the permitting agency determines that the watercourse complies with the criteria and features on the attached page titled *Criteria to Verify or Identify a Watercourse as a Stream*.

Appeals to the determination of the presence of a stream may be undertaken consistent with appeals procedures of the local agency.

[1] Streams may include watercourses such as rivers, creeks and gulches, if they meet the definition above and/or the *Criteria to Verify or Identify a Watercourse as a Stream*.

2F. CRITERIA TO VERIFY OR IDENTIFY A WATERCOURSE AS A STREAM[1]

(Ratified by Collaborative July 22, 2004)

A watercourse which does not meet any of the stream definitions may be considered a stream if the director of the permitting agency determines that the watercourse complies with the following three features and criteria:

(1) the watercourse is hydrologically connected to a waterway above and below the site or is connected to a spring, headwaters, lake, and/or bay and satisfies the conditions identified in paragraph (A) below; and

(2) the watercourse is within a defined channel which includes a bed, bank, and exhibits features that indicated actual or potential sediment movement and satisfies the conditions identified in paragraph (B) below; and

(3) the watercourse occupies a specific topographic position and satisfies the conditions identified in paragraph (C) below.

In determining whether the subject watercourse possesses these three (3) features, the director will consider the following conditions as examined and summarized in writing by a qualified expert to the satisfaction of the permitting agency. In addition to the following, the director may require the applicant to provide such additional information as he/she deems necessary to determine if the watercourse satisfies the three criteria listed below.

A. **Hydrologic Connectivity**—Criteria #1 above will be considered met if any of the following conditions are present:

1. Stream headwaters, springs, storm drain culverts, underground seepage, or groundwater flow are considered connectivity. Sections above and/or below this connectivity are streams if they meet the other required features (i.e., a stream flowing through a culvert is a stream both above and below the culvert.)

2. Streams may be connected across or over manmade improvements such as roads. When flowing across or over such improvements within the public right-of-way, other than stream channel improvements, it is not considered a stream. Sections above and/or below this connectivity are streams if they meet the other required features.

B. **Channel Form**- Criteria #2 above will be considered met if any of the following conditions are present:

1. Stream channels may be natural, altered, or engineered.

2. Stream channels begin at the point of bed and bank initiation.

3. Springs are considered the start of a stream if located uphill from stream initiation.

4. A stream channel must have enough flow under present-day conditions to maintain channel form and to move sediment. A non-engineered stream channel bed and bank are created and maintained by erosion and sedimentation, thus the presence of a channel with bed and bank is itself evidence of sufficient flow. Flow volume or timing is not criteria for stream determination.

[1]Excerpted from the City of Oakland Municipal Code Chapter 13.16, Stream Protection, Storm Water Management and Discharge Control Ordinance.

5. Scour, sedimentation, sediment sorting, undercut banks and/or other erosion, deposition, or transport features are signs of sediment movement.

6. Engineered or altered channels are partially or wholly made of earth, concrete, rip rap, or other materials. The hardened nature of these channels bed and banks, and a lack of available sediment along the channel reach, may prevent signs of sediment movement or scour. Such channels need not have explicit evidence of sediment transport.

7. If a stream is connected underground and the area overlying this underground connection is considered a wetland using the Army Corps of Engineers wetland delineation criteria, this portion is a stream despite possibly lacking stream channel form.

8. If a stream is underground due to being filled without appropriate permits from all applicable regulatory agencies (federal, state, and local), or due to a landslide, it is considered a stream.

C. **Topographic Position**- Criteria #3 above will be considered met if any of the following conditions are present:

1. The watercourse is either 'U' shape or 'V' shape channel typically located at the low point of a macro-topographic feature.

2. The watercourse consists of bowl, 'U', or 'V' shaped topography with high points draining to valley or ravine as part of a large drainage network leading to large streams, lakes and/or a bay.

3. The watercourse located on flatland consists of shallow bowl or 'U' shaped topography. Generally these streams flow from the hills toward a bay following the slope of the land.

4. Stream topography can be indicated on a topography map by a 'U' or 'V' shape pointed in the uphill direction.

A stream begins at the first point at which all three features identified in paragraphs (1), (2) and (3) are met.

2G. DEFINITION OF TOP OF BANK

(Ratified by Collaborative June 24, 2004)

Top of bank designates a stream boundary where a majority of normal discharges and channel forming activities takes place. The top of bank boundary will contain the active channel, active floodplain, and their associated banks. Top of bank of streams with levees will be delineated on the inner edge of the levee. Where there are no distinguishable features to locate top of bank, the local permitting agency or the Santa Clara Valley Water District will make a determination and document as appropriate. In the absence of this determination, the 100-year water surface will be used.

Examples

1. Wide meandering stream with a discernable active floodplain

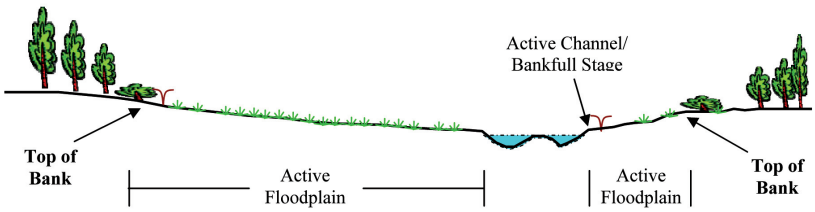

2. Stream in steep sloped area and/or area with little potential for lateral movement, but distinguishable bankfull stage

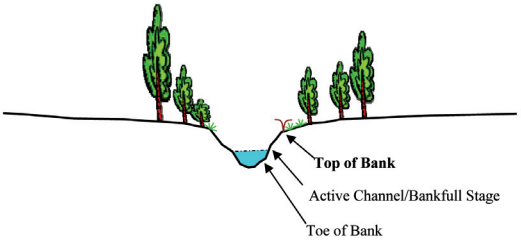

3. Meandering stream with active floodplain

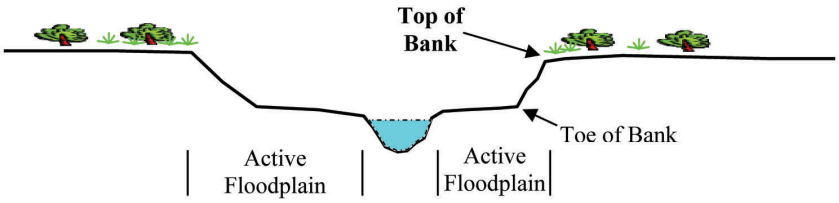

4. A stream with levees

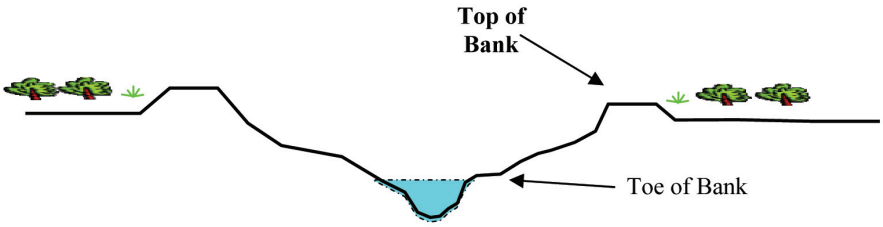

5. A concrete lined or other bank protected stream

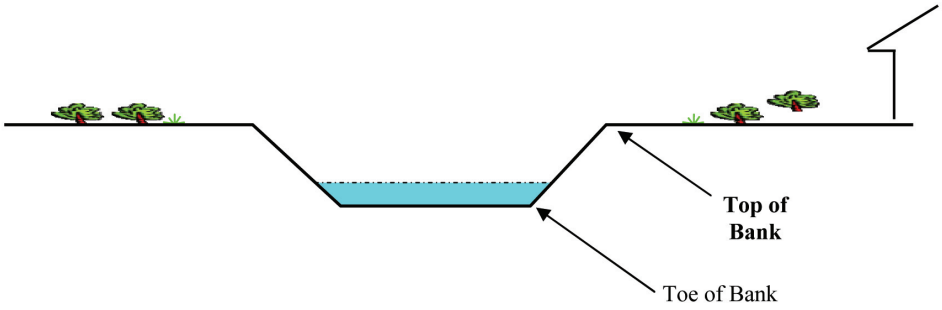

References

Dunne T and LB Leopold. 1978. Water in environmental planning.
W.H. Freeman and Co. New York, New York.

Harrelson CC, CL Rawlins, and JP Potyondy. 1994. Stream channel reference sites: An illustrated guide to field technique. Rocky Mountain Research Station, USDA Forest Service. RM-245.

Hedman ER. 1970. Mean annual runoff as related to channel geometry of selected streams in california. USGS Water-Supply Paper 1999-E in cooperation with the CA Dept of Water Resources.

Hedman ER and WR Osterkamp. 1982. Streamflow characteristics related to channel geometry of streams in western united states. USGS Water-Supply Paper 2193.

Leopold LB. 1994. A view of the river. Harvard University Press. Cambridge, MA.

Pleus AE and D Schuett-Hames. 1998. TFW Monitoring program method manual for the reference point survey. Prepared for the Washington State Dept of Natural Resources under the Timber, Fish, and Wildlife Agreement. TFW-AM9-98-002.

Rosgen DL. 1994. A classification of natural rivers. Catena. 22:169-199.

Stream Notes. 1998. Would the real bankfull please stand up!. Stream Systems Technology Center, USDA Forest Service.

VT ANR. 2004. Vermont stream geomorphic assessment: Appendix K, identification of bankfull stage. Vermont Agency of Natural Resources.

Wahl KL. 1977. Accuracy of channel measurements and the implications in estimating streamflow characteristics. USGS – Jour of Research. 5(6):811-814.

2H. STREAMSIDE RESOURCE PROTECTION QUESTIONS

(Ratified by Collaborative on March 24, 2005 and revised on July 2005 to be consistent with other Implementing Tools.)

When to Use these Questions

These questions are be used as part of the local permitting agency's initial review of permit applications for development of streamside parcels, after a streamside resource review has been has triggered by finding that a parcel(s) are within the Streamside Review Area. These questions may be used for review of single family permits, or, you can use the shorter Streamside Resource Protection Questions for Single-Family Units for the review of single-family unit permit applications.

How to Use these Questions

These questions may be used by permitting agencies as a stand-alone document, or, they may be added to existing permit intake or CEQA questionnaires, as long as all questions are included in some manner as part of the permit application process.

Purpose of these Questions

The purpose of these questions is to gather important information about past, present and proposed conditions on specific streamside parcels where development is proposed. After you have identified that a parcel(s) that is proposed for development is adjacent to a stream (i.e., the streamside 'trigger' has been activated), and you review the Checklist for Review of Land Use Near Streams to determine that the proposed project is not exempt from streamside permit review, the next step is to complete these questions.

This first set of questions is to be filled out by the project applicant, then, the second set of questions is to be completed by staff for the local permitting agency. You may need to consult with staff from other departments to provide the information required to complete these questions. You will find it helpful to consult information sources such as the database and area maps administered by the Santa Clara Valley Water District, USGS maps, etc. SCVWD has developed a GIS Mapping Tool to support Water Resource Protection. Please see Chapter 9 for more information on how to use the Mapping Tool. You may find it necessary to visit the parcel(s) in question to gather or confirm site-specific conditions.

Providing Photos of the Project Site

You may find it helpful to provide a few photos of the project site, which show conditions such as:

1. Top of Bank
2. The appearance and upland boundary of riparian vegetation
3. Existing structures and improvements
4. Stream(s) on or adjacent to the site
5. Other conditions such as wetlands, streamside slopes, erosion conditions, etc.

These photos will help provide the information to complete these questions, and could save the Applicant and agency staff time in the long run.

Next Steps After Answering these Questions:
After these questions are answered, refer to the Guidelines and Standards for Land Use In and Near Streams, and related Best Management Practices (BMP's). The Guidelines and Standards and related BMP's will provide guidance for:

1. How to incorporate design changes in the proposed project to protect stream resources, and;
2. Which conditions of approval for development should be part of the permit for the proposed project.

Instructions for Answering these Questions
When providing responses to these questions, if responses to specific questions are 'yes', please provide a written summary with details in the space provided. If additional space is needed, please create a separate sheet with the parcel number and/or address listed at the top and attach it to the completed list of questions.

Questions to be Completed by Project Applicant

1. Name of applicant and application number:
2. Name of property owner (if different than applicant):
3. Property address (es) and assessor parcel number(s):
4. Name of stream(s), watercourse(s) and/or other surface water bodies within 100 ft. of the proposed activity:
5. Is all or part of a stream(s) and/or waterbody(ies) within the boundaries of the site? Please identify by name and describe.
6. Is all or part of stream(s)/waterbody(ies) described in #5 (may answer 'yes, no or maybe'):
   a. perennial (flows all year)
   b. intermittent (flows part of year)
   c. ephemeral (only flows in response to rain or a spring)

7. What type(s) of stream(s) and/or waterbody(ies) are within 100 ft. of site or within the boundaries of the site? If surface water resources are not on but are near site, this may be important information to help inform permit review.

Please note below for each item a-g whether stream/waterbody is within boundaries of site or within 100 ft. of site.

a. "Natural" channel with little or no hardening
b. "Natural" channel hardened with riprap, gabions, sacked concrete, etc.
c. Modified earthen channel
d. Concrete lined channel (U shaped or trapezoidal)
e. Enclosed by levee
f. Enclosed by floodwall
g. Enclosed in a pipe or culvert

Please see graphics below for stream types.

A. "Natural" channel with little or no hardening

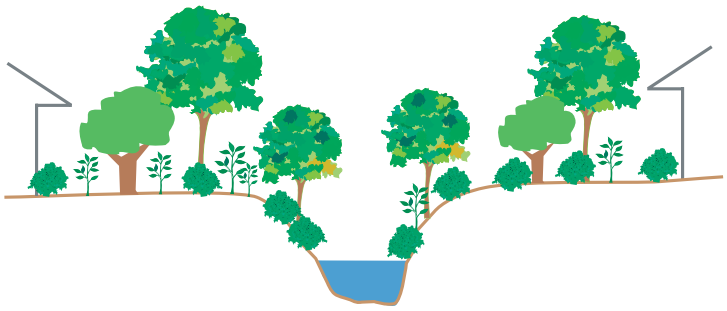

B. "Natural" channel with riprap, gabions, sacked concrete, etc.

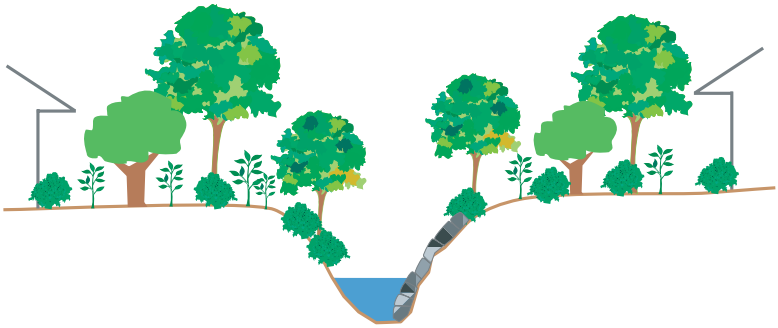

C. Modified earthen channel

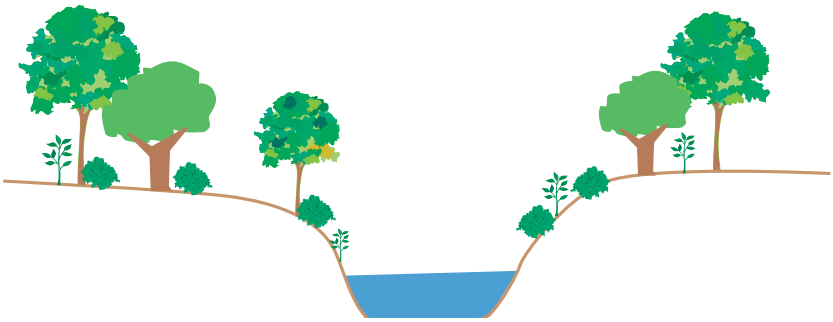

D. Concrete lined channel

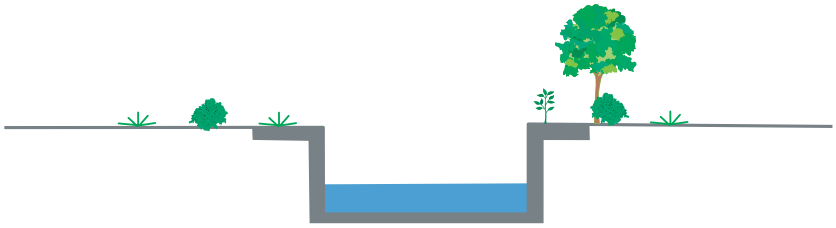

E. Enlcosed by levee

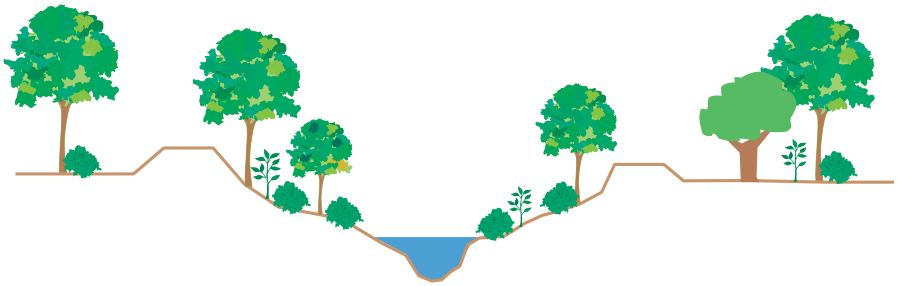

F. Enclosed by floodwall

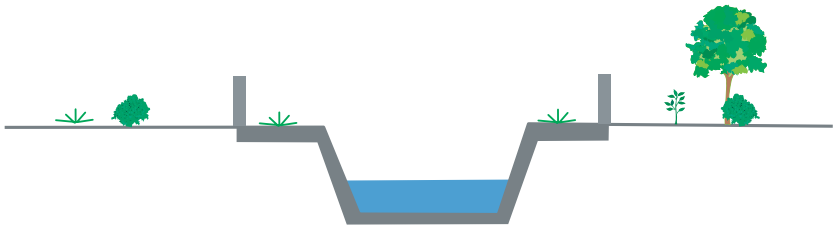

G. Enlcosed in a pipe or culvert

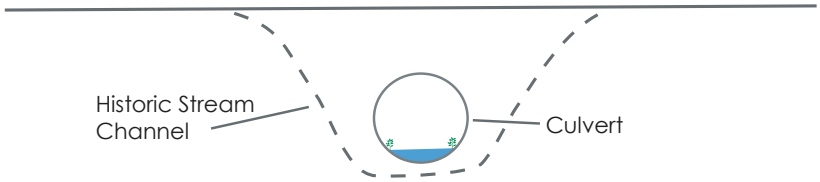

If stream/waterbody is a combination of a-g please describe:

8. Is there a wetland on or within 200 feet of the site? Is it a Section 404 Federally delineated wetland? (May answer 'yes, no or maybe'):
9. Will grading and/or earth movement occur within an existing floodplain? If so, how much?
10. Does the proposed project involve any construction within a stream or waterbody and/or between an existing Top of Bank?
11. Does the project involve utility pipe lines, directional boring or trenching?
12. Does the project propose to divert the natural flow or change the existing bed of a stream or waterbody?
13. Does the project involve the present or planned removal of water from a stream or waterbody for storage or use on site?
14. Does the project have the potential to involve the disposal or deposition of debris, waste or any material that could pass into a stream, waterbody or wetland?
15. Does the project involve the removal or alteration of existing riparian vegetation or trees? Please describe how and where this would occur on the on site.[1]
16. If you can, tell us if there are patches of invasive plants on the site, such as Giant reed (Arundo donax) or Pampus grass (Cortaderia selloana), which can rapidly spread and crowd out native riparian plants. If invasive plants are removed and replaced with native riparian plants, this will improve the local streamside ecosystem. This information may be used to help identify, in cooperation with the Santa Clara Valley Water District, if and how invasive plants can be removed and replaced with plants appropriate to the watershed to maintain the capacity of local flood channels.

[1]Plants adapted to moist growing conditions along streams, waterways, ponds, etc., usually endemic or native to the area.

Questions to be Completed by Permitting Agency Staff

1. Is project located within a streamside parcel?
2. Is all or part of stream or waterbody at the site owned in fee or held in easement by the SCVWD?
3. Is all or a portion of the site located within an area prone to flooding as shown on FEMA, California Dept. of Water Resources or SCVWD maps?
4. Does the project affect the following (may answer 'yes, no or maybe'):

a. Fish Habitat Management Plan Area (FHMPA);

b. Mitigation and Monitoring Plan Area (MMP and SCVWD Project);

c. Mitigation and Monitoring Plan approved by a local jurisdiction;

d. Habitat Conservation Plan(s) approved by a local jurisdiction?

e. Existing or planned restoration project(s) approved by a local jurisdiction?

f. Existing or planned flood protection project

Note: please identify information sources if answer is 'yes' to a-f

5. Does the project propose enhancements for vegetation, wildlife or fish resources? Please summarize.
6. Does the project propose the use, generation or storage of hazardous materials on site?
7. Does a problem exist on the site, such as significant streambed or bank erosion, that appears to be related to off-site activities?
8. Will a hydrology report or hydraulic analysis be required for the project?
9. Is it likely that other local, State or Federal permits may be needed for the proposed project? Has the Applicant been provided with the attached list of Federal and State natural agencies)?
10. Will a site visit be conducted? If so, by whom? Please summarize any important observations made.

2I. STREAMSIDE RESOURCE PROTECTION QUESTIONS FOR SINGLE-FAMILY UNITS

(Ratified by the Collaborative May 23, 2005)

When to Use These Questions

These questions are to be used as part of the local permitting agency's initial review of permit applications for development of individual single-family parcels, after a streamside resource review has been triggered by finding that a parcel is within the Streamside Review Area. Individual single-family projects such as remodels of existing homes in urban areas may be exempt from these questions; consult with your permitting agency for this determination. Typically, new streamside single-family homes on larger urban, suburban or rural lots and some remodels/rebuilds will be subject to these questions.[1]

This Questionnaire is to be used for individual single-family unit permit applications only; it is not to be used for larger developments, such as residential subdivision and planned developments, industrial and commercial developments and capital improvement projects. Those projects need to use the longer list of questions on the Streamside Resource Protection Questions. Please ask staff from your local permitting agency for assistance if you need this longer list of questions for larger projects.

Purpose of this Questionnaire

The purpose of this Questionnaire is to gather important information about past, present and proposed conditions on specific streamside parcels where development is proposed. After you have identified that a parcel(s) that is proposed for development is adjacent to a stream (i.e., the streamside 'trigger' has been activated), and you review the Checklist for Review of Land Use Near Streams to determine that the proposed project is not exempt from streamside permit review (Categories 2, 3 or 4), the next step is to complete this Questionnaire.

This Questionnaire is to be filled out by staff for the local permitting agency and the project applicant, as it requires technical knowledge of stream and site conditions. You may need to consult with staff from other departments to provide the information required to complete this Questionnaire. You will find it helpful to consult information sources such as the database and area maps administered by the Santa Clara Valley Water District, USGS maps, etc. You may find it necessary to visit the parcel(s) in question to gather or confirm site-specific conditions.

Providing Photos of the Project Site

You may find it helpful to provide a few photos of the project site, which show conditions such as:

1. Top of Bank
2. The appearance and upland boundary of riparian vegetation
3. Existing structures and improvements
4. Stream(s) on or adjacent to the site
5. Other conditions such as wetlands, streamside slopes, erosion conditions, etc.

These photos will help provide the information to complete these questions, and could save the Applicant and agency staff time in the long run.

[1]This Questionnaire may be used by permitting agencies as a stand-alone document, or, they may excerpt questions that are not on their existing permit intake questionnaires and add them to an existing questionnaire.

Next Steps After Answering these Questions

After these questions are answered, refer to the Guidelines and Standards for Land Use Near Streams, and related Best Management Practices (BMP's). The Guidelines and Standards and related BMP's will provide guidance for:

1. How to incorporate design changes in the proposed project to protect stream resources, and;
2. Which conditions of approval for development should be part of the permit for the proposed project.

Instructions for Answering these Questions

When providing responses to these questions, if responses to specific questions are yes', please provide a written summary with details in the space provided. If additional space is needed, please create a separate sheet with the parcel number and/or address listed at the top and attach it to the completed list of questions.

Questions to be Completed by Project Applicant

1. Name of applicant and application number:
2. Name of property owner (if different than applicant):
3. Property address(es) and assessor parcel number(s):
4. Name of stream(s), watercourse(s) and/or other surface water bodies in the vicinity of the proposed activity:
5. What type(s) of stream(s) and/or waterbody(ies) are within 100 ft. of site or within the boundaries of the site? Please note below for each item a-g whether stream/waterbody is within boundaries of site or within 100 ft. of site.

a. "Natural" channel with little or no hardening

b. "Natural" channel hardened with riprap, gabions, sacked concrete, etc.

c. Modified earthen channel

d. Concrete lined channel (U shaped or trapazoidal)

e. Enclosed by levee

f. Enclosed by floodwall

g. Enclosed in a pipe or culvert

Please see graphics below for stream types.

A. "Natural" channel with little or no hardening

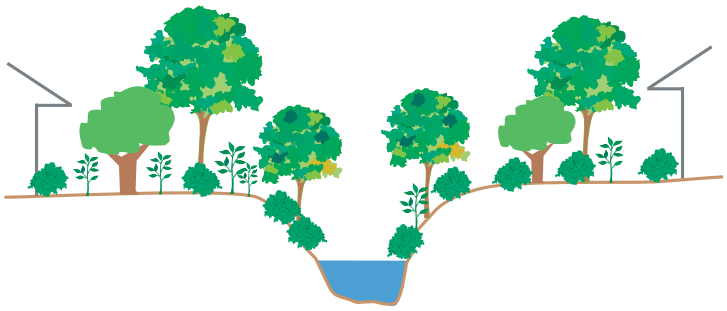

B. "Natural" channel with riprap, gabions, sacked concrete, etc.

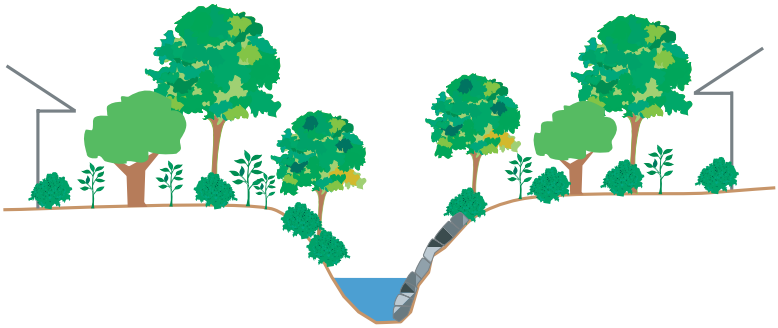

C. Modified earthen channel

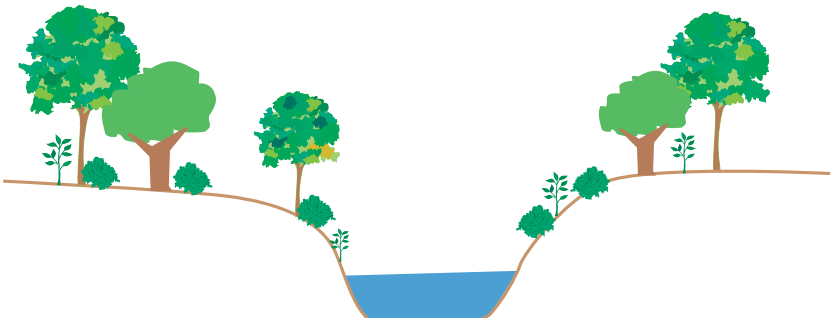

D. Concrete lined channel

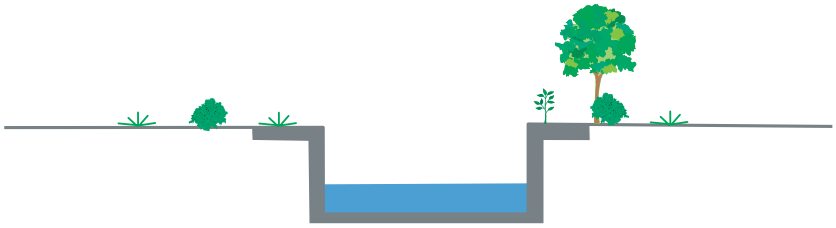

E. Enlcosed by levee

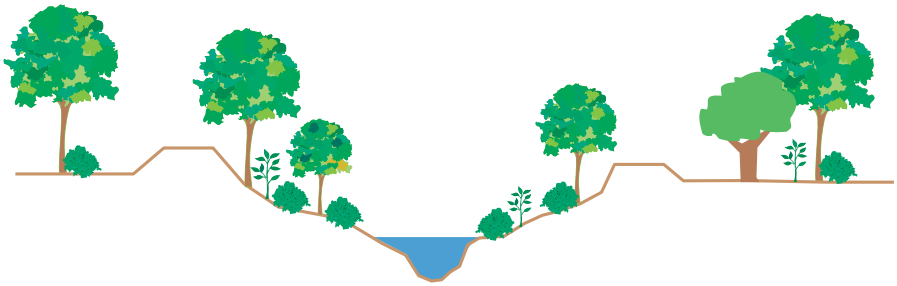

F. Enclosed by floodwall

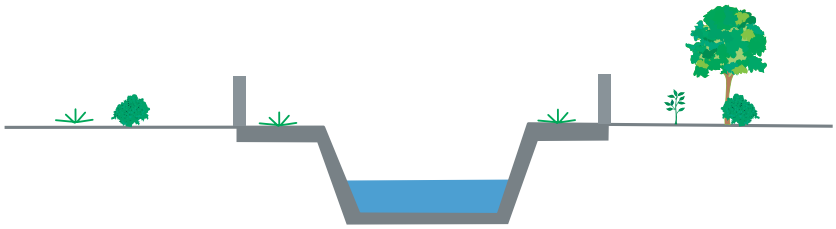

G. Enlcosed in a pipe or culvert

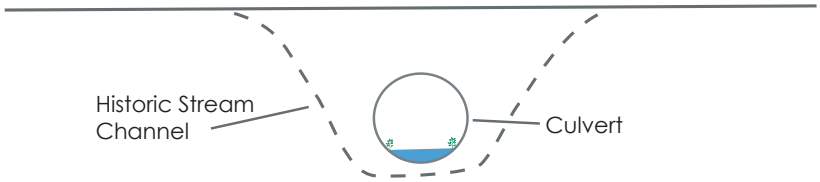

If stream/waterbody is a combination of a-g above please describe:

6. Is all or part of a stream(s) and/or waterbody(ies) within the boundaries of the site? Please identify by name and describe.
7. Is all or part of stream(s)/waterbody(ies) described in #5 (may answer 'yes', 'no' or 'maybe'):

   a. perennial (flows all year)
   b. intermittent (flows part of year)
   c. ephemeral (flows in response to rain)

8. Does the proposed project involve any construction within a stream or waterbody and/or between an existing Top of Bank)?
9. Does the project involve the present or planned removal of water from a stream or waterbody for storage or use on site?
10. Does the project have the potential to involve the disposal or deposition of debris, waste or any material that could pass into a stream, waterbody or wetland?
11. Does the project involve the removal or alteration of riparian vegetation or trees? Please describe how and where this would occur on the on site.
12. If you can, tell us if there are patches of invasive plants on the site, such as Giant reed (Arundo donax or Pampus grass (Cortaderia selloana, which can spread rapidly and crowd out native plants. If invasive plants are removed and replaced with native riparian plants, this will improve the local streamside ecosystem. If you do remove substantial stands of invasive plants, please consult the following to find out the correct methods to use when removing them: California Native Plant Council website at http://groups.ucanr.org/ceppc/; and/or the Community Projects Review Unit at the SCVWD, (408) 265-2607 ext. 2650.

Questions to be Completed by Permitting Agency Staff

1. Is all or part of stream or waterbody on the site owned in fee or held in easement by the SCVWD?
2. Is there a need to require that Best Management Practices be required as conditions of permit approval? If so, do they relate to:

   a. Water Quality
   b. Streambank and/or Streambed Conditions
   c. Riparian Vegetation
   d. Fisheries

3. Are other local, State or Federal permits needed for the proposed project (see attached list of Federal and State resource agencies)?

California Native Plant Council Web site:
http://groups.ucanr.org/ceppc/

2J. INFORMATION TO BE INCLUDED ON PLANS FOR STREAMSIDE DEVELOPMENT

(Ratified by Collaborative on March 24, 2005)

Purpose of a Site Plan for Streamside Development

The purpose of a Site Plan for Streamside Development is to show pertinent information related to existing and proposed conditions which may affect sensitive streamside natural resources. This information will then be considered by the local permitting agency, along with other pertinent information, as the permit review process is conducted for the proposed development.

In addition to the other requirements of the permitting agency for Site Plans, please show the following on the Site Plan for the proposed project.

Existing Conditions

a. Location of all existing and proposed improvements, including existing and proposed buildings, other structures, concrete and/or other impervious surfaces, fences, decks, swimming pools and related discharge connection(s), septic tanks, leach fields, utilities, trails, easements, wells etc.).

b. Location of all surface water resources, including where stream(s) waterbody(ies), wetland(s) (including any Section 404 Federally protected wetlands, or State protected, wetlands) or other surface water resources are located on or within 100 ft. of the proposed activity.

c. Location of Top of Bank and distances between any improvements and Top of Bank, and site topography with appropriate contour intervals as required by the permitting agency.

d. Location and direction of existing and proposed surface drainage, including runoff from roof, downspouts, gutters, roads, parking areas and culverts, including proposed storm water infiltration devices

e. Existing condition of stream bank and/ or stream bed (i.e. vegetation, roads, paths, erosion problems, etc.).

f. All parts of the site that are located within an area prone to flooding as shown on FEMA or Santa Clara Valley Water District maps.

Proposed Conditions

a. Specific measures and/or improvements to protect stream(s) and/or waterbody(ies) from water quality impacts.

b. Location and type of existing and proposed landscaping materials, including riparian vegetation.

c. Plans for modifying existing vegetation, including riparian vegetation.

d. Proposed grading and earth movement including quantity and depth of cut and fill, placement of fill and how it will be treated in proximity to a stream(s)/ waterbody(ies). Please provide typical cross-sections through graded area(s).

e. Proposed alteration(s)to banks and beds of stream(s)/waterbody(ies).

f. All improvements intended to enhance, protect or restore natural resources on the site and in adjacent stream(s) and/or waterway(s).

2K. REGULATORY AGENCIES

SANTA CLARA VALLEY WATER DISTRICT

COMMUNITY PROJECTS REVIEW UNIT
5750 Almaden Expressway
San Jose, CA 95118
(408) 265-2607, ext. 2258
(408) 265-2607, ext. 2350
www.valleywater.org

UNITED STATES ARMY CORP OF ENGINEERS – SAN FRANCISCO DISTRICT

US ARMY CORPS OF ENGINEERS
333 Market Street
San Francisco, CA 94105-2197
(415) 977-8604
www.spn.usace.army.mil/

CALIFORNIA REGIONAL WATER QUALITY CONTROL BOARD

SAN FRANCISCO BAY REGION
1515 Clay St., Suite 1400,
Oakland, CA 94612
(510) 622-2300
www.waterboards.ca.gov/sanfranciscobay

CENTRAL COAST REGION
895 Aerovista Place, Suite 101
San Luis Obispo, CA 93401
(805) 549-3458
(805) 549-3147
www.waterboards.ca.gov/centralcoast/index.htm

CALIFORNIA DEPARTMENT OF FISH AND GAME

20 Lower Ragsdale Drive, #100
Monterey, CA 93940
(831) 768-8797
(831) 649-2870

CENTRAL COAST REGION 3

7329 Silverado Trail
Napa, CA 94558

P.O. Box 47
Yountville, CA 94599
(707) 944-5517

US FISH AND WILDLIFE SERVICE

(916) 414-6600

SANTA CLARA COUNTY NOAA

(707) 575-6060

2L. CONSTRUCTION-RELATED PERMIT CONDITIONS FOR STREAMSIDE RESOURCE PROTECTION

(Ratified by the Collaborative on March. 24,2005)

INTRODUCTION

The following are standard measures needed to protect stream resources during construction. There may be other regulatory programs or regulations that also address these issues. When approving permits for development in streamside areas, the local permitting agency will include these as conditions of approval for each permit granted.

On the proposed projects Site Plan, or as an attachment to it, show specific measures/ improvements, including illustrations or diagrams, which address and include:

a. Wet weather protection measures

b. Erosion protection measures

c. Methods and locations for cleaning tools and equipment

d. Dust control measures

e. Litter prevention measures

f. Debris collection and removal measures

g. Wash out facility for concrete, paint, drywall, etc.

h. Location of portable toilets

i. Construction-related storm water management controls (i.e., sediment traps, berms, silt fences, sand bags, dikes, geotextiles and mats, mulching, seeding and plantings).

j. Measures for managing hazardous material on site, including fuel.

k. As appropriate, stream protection and permit conditions for the project.

3A. PREAMBLE AND INTRODUCTION TO THE PROPOSED GUIDELINES AND STANDARDS FOR LAND USE NEAR STREAMS

I. BACKGROUND

The following set of Proposed Guidelines and Standards (G&S's) was developed by the Santa Clara Valley Water Resources Protection Collaborative (Collaborative) to address land use near streams and protect surface and groundwater quality and quantity in Santa Clara County. A primary objective of the Collaborative is to develop and implement a consistent set of G&S's to enhance water and watershed resource protection through local agency land use planning and permitting.

The G&S's are designed to compliment existing regulations, such as the City/County/SCVWD, NPDES provisions, which address some related water quality issues. It is assumed that each jurisdiction will also continue to follow other existing regulations that protect streams and/or surface water quality. The G&S's are also complimented by a set of Design Guides that provide more detail on the G&S's as well as a set of Model Enhanced Practices, which outline additional voluntary protective measures for jurisdictions and property owners. These two documents can be found in Chapters 4 and 7 respectively of this User Manual.

II. IMPORTANCE OF PHYSICAL LINKAGES BETWEEN STREAMS AND ADJACENT LAND

It is important to note that while many of the G&S's focus on in-stream activities, there is a significant physical linkage between the in-stream and near-stream biological communities that is critical to protect and restore where possible. The riparian systems that border many streams in Santa Clara County provide important habitat for aquatic invertebrates, fish, amphibians, birds and mammals. A number of species are dependent on a healthy riparian system to survive.

Although the G&S's that follow include some measures to protect this habitat, property owners are also expected to comply with the existing guidelines of State and Federal agencies, which are specifically designed to protect these biological resources. To assist property owners, the G&S's and corresponding User Manual reference those activities for which State and Federal agencies should be consulted.

III. HOW THE GUIDELINES AND STANDARDS ARE TO BE USED

The G&S's are intended to be used for the purposes of development review of proposed land use activities for new development, major redevelopment and where appropriate, single family units. In developing the G&S's, the Collaborative has considered how to make the G&S's realistic, implementable, and easy to administer. In addition, the Collaborative has considered how to ensure that single family property owners would not be unduly burdened by extensive or expensive reporting requirements.

It is also assumed that when a local permitting agency has in place regulations, standards or guidelines, which are stricter than the Proposed G&S's, such regulations, standards or guidelines will remain in force and continue to be implemented after the adoption of final G&S's.

IV. IMPLEMENTATION OF THE GUIDELINES AND STANDARDS

Each city/County will need to undertake a process to determine how it will adopt and implement the Guidelines and Standards and related Implementing Tools and then confirm this decision with SCVWD.

Some of the Proposed G&S's may need to be altered during the adoption/implementation process and it may be necessary and appropriate for each local jurisdiction to adopt modified standards or approaches to implementation as long as the modified standard or approach is consistent with the agreed upon objectives for Guidelines and Standards for Land Use Near Streams. In addition, the maintenance and enforcement issues need to be further developed to determine cost sharing and responsible party.

V. COOPERATION BETWEEN PERMITTING AGENCIES

In those cases, where one agency has permitting authority for an activity that affects another agency's property or jurisdiction, such as a bridge, the lead permitting agency will consult with the other agency, in a timely manner, when reviewing or developing that project. The cities/County will also coordinate with decision-makers of public agencies not subject to local planning laws to inform them of the intent behind the G&S's.

VI. NEED FOR PUBLIC OUTREACH

The final set of G&S's will be implemented through the District and each jurisdiction's permit and planning processes combined with a concerted public outreach and education effort. It is also understood that these G&S's may vary depending on property ownership and the existing site characteristics and that the County and the cities will need to balance the goals of the G&S's with other municipal, County and Water District goals in making land use planning decisions.

V. LIST OF ACTIVITY HEADINGS

I. Riparian Corridor Protection
II. Bank Stability/Streambed Conditions
III. Encroachments between the Top of Bank
IV. Erosion Prevention and Repair
V. Grading
VI. Outfalls, Pump Stations and Site Drainage
VII. Channelization
VIII. Utility Encroachments
IX. Trail Construction
X. Septic Systems
XI. Trash Control and Removal
XII. Protection of Water Quality
XIII. Groundwater Protection
XIV. Flood Protection

3B. GUIDELINES AND STANDARDS FOR LAND USE NEAR STREAMS

I. Riparian Corridor Protection
Applicability of the Following Riparian Corridor Protection G&S's: The following guidelines and standards related to planting and removal of plants in this section are applicable in conjunction with a development proposal where SCVWD/city/county reviews landscaping plans.

I.A.1 Protection of the Riparian Zone
Enforce existing City/County/SCVWD general plans, policies, or ordinances related to riparian areas, water quality and source water protection.

I.A.2 Protection of the Riparian Zone
Develop criteria to determine allowable uses within riparian corridor and develop measures to protect existing riparian areas.

I.A.3 Protection of the Riparian Zone
Adopt, as appropriate, riparian corridor buffers consistent with onsite biotic conditions, which may be determined by a qualified professional to protect existing riparian habitat. Sensitive habitat areas should be identified and assigned appropriate buffers.

I.A.4 Environmental and Water Quality
Supplement CEQA guidance and checklist to include environmental impacts relative to temperature and water quality for aquatic life.

I.B. Native Plant Removal
Native riparian vegetation is not allowed to be removed unless there is a threat to public health and safety including an imminent danger of induced flooding and/or a biologist/arborist confirms that it will improve the stream ecology or habitat. If vegetation is proposed for removal in conjunction with a development project, mitigation will be provided as defined through the CEQA process and as agreed to by the local agencies and appropriate regulatory agencies.

I.C. Planting
Non-native species are not allowed to be planted between top of banks, or within an existing riparian corridor unless approved by appropriate state and federal regulatory agencies. Non-native invasive species are not allowed to be planted adjacent to an existing riparian corridor. Recommend watershed specific natives for major development restoration landscaping.

I.C2. Planting of Invasive Species
Encourage removal of and do not plant invasive species.

I.C3. Planting Within Tops of Banks
Planting appropriate vegetation between top of banks as an alternative to hardscape bank protection to promote bank stability, improve habitat, and provide other water quality benefits is encouraged if it does not reduce channel capacity significantly below design flows.

I.C4. Planting on Levees
No trees may be planted on a levee unless additional fill is placed against the levee.

I.C5. Planting Next to Water Supply Pipelines
Trees must not be planted within easement or right-of-way of SCVWD water supply pipelines or the minimum required by other jurisdictions, as appropriate.

I.D. Irrigation
Irrigation runoff must not be allowed to cause erosion. If within outboard levee slope, irrigation must be bubbler or drip-type systems, and must be used for establishment purposes only. No main lines may be installed in levees.

I.D2. Irrigation and Planting
Follow efficient water use landscape ordinance requirements for drought tolerant plants and water conservation.

I.E. Pesticide and Herbicide Use
Use of pesticides and delineation of responsibility for maintenance on District property or easements shall be conducted as defined by current practice.

I.F. Post-Construction Water Quality
Include post construction water quality mitigation measures in proposed development conditions.

I.G. Land Uses Next to Riparian Corridors/Streams:
Avoid locating loading docks, trash enclosures, chemical storage areas and stationary noise producing mechanical equipment next to streams and riparian corridors.

Refrain from locating new paved areas, active recreational areas, agricultural growing areas and grazing activities within riparian corridors.

I.H. Light
Avoid bright colors and glossy or glare producing building finishes on structures facing the stream or riparian areas. Avoid nighttime lighting in riparian corridors, direct lighting away from riparian corridor and maximize distance of lighting from riparian corridor.

I.I. Monitoring
For projects subject to mitigation/ monitoring requirements, riparian plantings for mitigation and bank repair/protection projects will be monitored to ensure successful establishment.

I.J. Protection of Fish and Aquatic Life
Preserve in and near-stream riparian vegetation whose canopies provide shade and nutrients for aquatic life.

I.J2. Protection of Fish and Aquatic Life
Protect/maintain stream characteristics suitable for fish habitat, including riffles, pools, gravel beds, stable undercut banks, overhanging vegetation & in-stream woody debris

II. BANK STABILITY/ STREAMBED CONDITIONS

II.A Slope Stability Requirements for New and Major Redevelopment Background: Slope stability requirements for watercourses will be determined based on geomorphic and hydrologic conditions, the bank's physical characteristics, such as composition and height, the potential for instability or erosion, other environmental considerations, structure loading and flood potential as determined by the applicant's engineer. Construction activities proposed below the top of bank and/or in the riparian corridor are subject to review and permit authorization from the Regional Water Quality Control Board, Department of Fish and Game, and in most cases, the US Army Corps of Engineers and their Federal consulting agencies.

II.B.1 Bank Stability for Structures Built Near Streams
Establish a bank stability requirement or trigger that applies to construction of new roads, parking lots, pools, and structures subject to the UBC. The bank stability requirement or trigger should be measured from top of bank and should be based upon stream characteristics including protection of existing riparian vegetation, natural or modified streams banks, and condition of bank.

For all new development and major redevelopment, the slope stability trigger will be set to be the greater of:

1) 2 to 1 structural slope stability requirement or trigger (This is measured using a hypothetical 2 horizontal to 1 vertical line projected from the toe of bank to a point where it intersects the adjacent ground.) The protection area should allow for construction access and access around the structure. For banks of larger streams, or for streams that are deeply incised or have highly erodable banks, a permitting agency may need to increase the protection area or trigger area in order to protect water quality and other resources.
2) 20 feet from top of bank or property line

For construction proposed within the protection area or trigger area, the applicant would need to:

(1) conduct a stability analysis by stream type and demonstrate that development would not require introduction of hardscape in order to maintain active floodplain or active channel slope

(2) show how maintenance or repair of the stream could be provided

II.B.2 Bank Stability for Structures Built Near Streams
Supplement CEQA guidance and checklist to include stream stability impacts from and to proposed development project

II.C. Flood Protection for Structures Built Near Streams

Structures will meet FEMA requirements if within a special flood hazard area. Refer to SCVWD Watershed Stewardship Plans and verify with SCVWD the status of any planned or anticipated flood protection projects and their right of way requirements. SCVWD may request dedication of land rights for flood protection or maintenance access in conjunction with new or redevelopment projects.

For levee sections, recommend 18 to 25 foot building setback from toe of levee.

EXCEPTION: Exceptions are allowed as consistent with City or County flood hazard ordinances.

II.D. Slope Stability Requirements for Single Family Units

The Purpose of Slope Stability Requirement For Single Family Units: Structures built near streams may negatively affect streams and streamside resources as well as the structure itself. Some potential issues include:

1. Adverse effects on streamside slopes, including effects on slope stability and erosion, and related hazards to structures built on streamside properties
2. Adverse effects on flood control facilities and related infrastructure
3. Adverse effects on local drainage facilities and related infrastructure
4. Adverse effects on riparian corridors and associated vegetation and related erosion impacts
5. Adverse effects to streams, including the effects of down-slope sedimentation and altered stream hydrology, and related impacts to water quality in streams
6. The structure itself can be undermined over time as the streambank erodes due to the dynamic nature of the stream resulting in health and safety hazards

The following Slope Stability Requirements are intended to serve

as development standards, that when used, will help enable the location of structures on streamside properties in a manner that avoids or minimizes impacts to streams, streamside natural resources, flood control facilities, local infrastructure and the structure itself.

Slope Stability Requirements as a' Geotechnical Trigger' for Permit Review

If a structure is proposed to be located closer to the Top of Bank than indicated by the following Slope Stability Requirements, this may serve as a trigger for local permitting agencies to require site-specific technical information related to precise slope conditions. If a property owner is proposing to place structures closer to a streamside slope than allowed by the Slope Stability Requirements, the permitting agency should require further study of on-site geotechnical soil and slope stability conditions. The purpose of the study is to determine:

1. whether or not the location of a proposed structure may threatenbank stability, and
2. whether or not the bank instability may threaten structures and/or potentially cause a health and safety hazard.

For banks of larger streams, or for streams that are deeply incised or have highly erodable banks, a permitting agency may need to require on-site geotechnical analyses even if the Slope Stability Requirement are met.

II. E. Slope Stability Protection Area for Single-Family Units [1]

The "Slope Stability Protection Area" is an area between a structure and the stream [2]. In some cases, a range of numbers is indicated. The assumption is that each local jurisdiction will select one of the numbers based on their existing priorities, permitting processes, and on-site conditions. It is also assumed that the channel depth of most streams in urban Santa Clara County is 10 feet deep or less. For streams, deeper than 10 feet, there should be a 2 to 1 protection area as measured from the toe of the bank.

Stability Protection Area

	Stream with Little or No Hardening	Structurally [3] Engineered System	Ephemeral Stream
Size of Protection Area (as measured from Top of Bank)[4]	25 – 20 ft.	15 ft.	10 - 15 ft

Notes: Potential Additions to the Slope

A. For a large lot (greater than 10,000 sq. ft), add 5 feet.

B. For a large home in which the FAR triggers a discretionary review, work with applicant to ensure that impacts such as drainage are redirected away from a stream and pursue opportunities to increase the slope stability protection area to better protect the stream (and home) from impacts. For example, consider decreasing the required front yard setback in order to accommodate an increased rear yard setback/slope stability area.

1 Single Family Unit refers to both (a) new single family units on existing lots of record and (b) new single family remodels/rebuilds as defined by local regulations/policy/ guidelines

2 In addition to protecting this area, BMP's should be used that are reflective of Guidelines and Standards,
for activities adjacent to this areas where discretionary review is used
(i.e redirecting drainage away from the stream and no removal of native riparian plants

3 A "structurally engineered system" is designed to provide slope stability. It may be a concrete-lined channel (U-frame or trapezoidal) or a stream substantially modified with riprap, gabions, structurally engineered sacked concrete, etc.

4 Area measured for Slope Stability Requirement to be measured based on location of Top of Bank, whether stream is on or off of property.

III. ENCROACHMENTS BETWEEN THE TOP OF BANK

Related Resource Agency Permits: In addition to the G&S's below, any construction activities proposed below the top of bank are subject to review and permit authorization from the Regional Water Quality Control Board, California Department of Fish and Game, and in most cases, the US Army Corps of Engineers and their Federal consulting agencies. Applicants may choose to complete a JARPA (Joint Aquatic Resource Permit Application) if permits are required from more than one Resource Agency.

III.A Overhang Top of Bank

1. Decks, pathways, buildings or any other structures (excluding road crossings, outfalls, and bank protection structures) may not overhang or encroach beyond or within the top of bank.

2. When illegal structures are identified, which cause public health and safety problems and/or damage to stream resources, appropriate jurisdiction should take actions to have them removed or modified.

III.B1. Design/Construction Related to Encroachments between the Top of Bank

The construction of clear span structures is preferred for new and replacement bridges. Bridge piers may be allowed if length of span makes clear span infeasible as determined by the local jurisdiction.

III.B2. Design/Construction Related to Encroachments between the Top of Bank

If a structure must be placed in the active channel due to structural requirements, feasibility, or otherwise, a geomorphic, biological impacts, and/or hydraulic analysis will be required and will be reviewed by SCVWD and other state and federal agencies. For construction of new bridges, loss of riparian, or aquatic habitat beneath the bridge should be mitigated and located as close to the new bridge as possible.

III.B3. Design/Construction Related to Encroachments between the Top of Bank

Have footings and pile caps that are designed based on channel scour to prevent erosion. The appropriate foundation depth should be determined by a licensed engineer and should be at minimum three (3) feet below active channel invert.

If depth of waterway allows, clearance under the bridge should be a minimum 12 feet for maintenance access or access to the stream should be provided from road.

III.B4. Design/Construction Related to Encroachments between the Top of Bank

Structures must not reduce the active channel or active floodplains' conveyance area or redirect flow to the detriment of another bank or the river bed. Designs in SCVWD jurisdictional areas must be capable of conveying 100-year design flow and meet SCVWD's freeboard requirements explained in Design Guides.

EXCEPTION: If structure may reduce the conveyance area or encroach into freeboard area, a hydraulic analysis will be required to demonstrate no increase in erosive velocity or flood elevations. Hydraulic analysis must be in HECII or HEC-RAS format (small rural streams may utilize simpler hydraulic analysis methods) and must model debris loading on piers (3 times the pier width) and include a scour analysis. Analysis must be acceptable to SCVWD.

III.B5. Design/Construction Related to Encroachments between the Top of Bank

Encroachments in active channels and active floodplains must provide for fish passage and not impact aquatic life.

EXCEPTION: Consideration of exceptions for fisheries impacts must be coordinated with NMFS, USFWS, CDFG, RWQCB and would require biological impacts analysis as well as a Streambed Alternation Agreement.

III.C. Water Rights Related to Encroachments between the Top of Bank

SCVWD permits required for diversion of surface water (removal of water from stream) in areas where District releases water to stream. Construction-related water diversions must also conform to DFG water diversion guidelines, and are subject to a biological assessment.

EXCEPTION: Stream owners may have riparian rights to water in stream. Owners must file statements with State Water Resources Control Board.

IV. EROSION PREVENTION AND REPAIR

Related Resource Agency Permits: In addition to the G&S's below, any activity that may impact a watercourse requires at minimum notification to the Regional Water Quality Control Board, California Department of Fish and Game, and in most cases, the US Army Corps of Engineers and their Federal consulting agencies. Applicants may choose to complete a JARPA (Joint Aquatic Resource Permit Application) if permits are required from more than one Resource Agency.

IV.A. Erosion Repair

IV.A. 1. Root cause of erosion
Where known, the root cause and extent of any erosion must be identified, described and reported to the appropriate agency or agencies prior to any attempts to repair erosion site.

IV.A. 2. Remediation of erosion
Property owner to remediate source of erosion if onsite.

IV.A. 3. Evaluation of effects of adjacent properties
All repair project proposals should include an evaluation for the potential impacts on both downstream and upstream banks.

IV.A. 4. Evaluation of impacts on channel dynamics
If erosion protection extends into active channel, evaluate post construction erosion potential due to change in stream dynamics caused by design.

IV.A. 5. Hydraulic analysis
If the repair method reduces stream cross-section or increases stream roughness, a hydraulic analysis is required to demonstrate no increase in flood elevations.

IV.A. 6. Construction on slopes
For construction on slope greater than 5%, require implementation of erosion and sediment control measures. (See the "Erosion and Sediment Control Field Manual" developed by the Water Quality Control Board.)

IV.B. Project Design/Construction

IV.B. 1. Use of Soft Erosion Repair Techniques
Design of erosion protection must utilize the softest possible method appropriate for the stream characteristics; use of hardscape materials or retaining walls within the banks of the watercourse should be avoided.

IV.B. 2. Use of Hardscape/ Retaining Walls
If hardscape or a retaining wall is to be used, it must be demonstrated that (1) all softer methods have been evaluated, (2) the proposed method will reduce erosion and (3) the proposed method will not cause erosion or negatively impact proper stream function in other areas.

IV.B. 3. Use of Hardscape/ Retaining Walls
If used, hardscape elements will require project proponents to mitigate impacts by planting appropriate native riparian vegetation onsite or at another suitable location. Mitigation requirements will need approval by regulatory agencies.

IV.B. 4. Design of Hardscape/ Retaining Walls
Design cutoff walls or keys to anticipate scour depth. Must be minimum 3 feet deep.

IV.B. 5. Design of Channel Repairs
Channel repairs should match the contour of the upstream and downstream banks to prevent constrictions and increased potential for erosion.

IV.B. 6. Design of Channel Repairs
Over-steepened banks should be laid back to a more stable configuration whenever possible.

IV.B. 7. Treatment of Bare Slopes
Bare earthen slopes resulting from work must be treated to minimize erosion and prevent sediment from entering streams and other aquatic habitats. See Design Guide for recommendations for seed mixes to be used with/without native plants.

V. GRADING

Related Resource Agency Permits: In addition to the G&S's below, any grading activities proposed below the top of bank and/or in the riparian corridor are subject to review and permit authorization Regional Water Quality Control Board, California Department of Fish and Game (i.e. Streambed Alteration Agreement), and in most cases, the US Army Corps of Engineers and their Federal consulting agencies. Applicants may choose to complete a JARPA (Joint Aquatic Resource Permit Application) if permits are required from more than one Resource Agency.

V.A. Drainage Related to Grading
Grading must address drainage. Drainage that avoids the need for outfalls, or reduces the size and/or number or outfalls is encouraged.

V.B. Construction Related to Grading
Grading adjacent to streams must be in compliance with NPDES general permit, where applicable, and must at a minimum provide for buffer areas and vegetated swales between the stream and graded areas.

In compliance with the statewide General Permit for Construction, grading activities that disturb one acre or more of land require the project proponent to prepare and have on site a Storm Water Pollution Prevention Plan.

EXCEPTION: Exceptions are allowed per each municipality's drainage ordinance and NPDES permits. Exceptions from swale and BMP's are allowed if there are other run-off controls in place.

V.B.2. Construction Related to Grading
Recommend that fill be placed adjacent to dry side of the levee to minimize the levee height unless it causes drainage problems, disturbs wetlands, creates safety concerns, or impacts aesthetics of property.

V.B.3. Construction Related to Grading
Modifications to levees are allowed if a slope stability analysis is performed and any structure that provides support to the levee is designed with long-term life span (50-100 years).

EXCEPTION: Exceptions are allowed (although discouraged) to cuts in levees if for a temporary purpose and repair is completed by the beginning of October and a performance bond is used to assure completion.

V.B.4. Construction Related to Grading
Grading adjacent to drinking water reservoirs (Calero, Anderson, Lexington, Coyote, Almaden) must be acceptable to the District, which may require water quality monitoring depending on project's potential for adverse impacts. Consider protective measures in source water protection zones and sensitive areas of reservoir watersheds. Erosion and sediment control measures are required to prevent sediment contribution from the construction area to the reservoir.

VI. OUTFALLS, PUMP STATIONS AND SITE DRAINAGE

Related Resource Agency Permits: In addition to the G&S's below, a discharge to a watercourse requires notification to Regional Water Quality Control Board, California Department of Fish and Game (i.e. Streambed Alteration Agreement), and in most cases, the US Army Corps of Engineers and their Federal consulting agencies. Applicants may choose to complete a JARPA (Joint Aquatic Resource Permit Application) if permits are required from more than one Resource Agency.

VI.A.1 Site Drainage
Runoff must not be directed across stream watershed boundaries as a result of grading or through storm drain system design.

VI.A.2 Site Drainage
Direct site drainage through vegetated areas or stilling basins prior to discharge or collection in storm drain system.

VI.A.3 Site Drainage
No concentrated overbank drainage is allowed (e.g. roof overhangs or downspouts). If overbank drainage will occur, use vegetative buffer strips or direct drainage to landscaped areas.

VI.B.1 Outfalls
Prefer that there are no new outfalls, However, if there is no way to avoid new outfalls then the following applies:

1. Minimize the number of outfalls.
2. New channel outfalls must conform to the local municipality's drainage master plan.
3. Slope protection for outfalls must meet SCVWD minimum engineering standards using softer slope protection methods if possible (see Standard Details and Specifications). Outfalls should not overhang the bank or bed as this can lead to excessive channel erosion.
4. Minimum diameter is 12 inches and discharge must be oriented downstream and pipe invert should be at least 2 feet above the stream bottom in areas where sediment deposition is anticipated.
5. Flap gates will be installed when 100-year water surface is above adjacent ground at inlet. Outfalls with flap gates require dormers or

similar designs to isolate the flap gate and keep them out of flow area (see Standard Details and Specifications).

6. Outfalls on federal projects (Coyote Creek downstream of Montague Expressway, Guadalupe River downstream of Blossom Hill, Llagas Creek downstream of Buena Vista, and Uvas Creek downstream of Santa Teresa) must be submitted to SCVWD to coordinate federal review and approval.

7. In conjunction with new or redevelopment, abandoned outfall pipes and slope protection must be removed and the stream bank restored to similar condition existing upstream and downstream of site.

8. Permits are needed from Dept of Fish and Game, U.S. Army Corps, and RWQCB. See Standard Details and Specifications.

VI.B.2. Outfalls

Discharge must not pollute receiving water or cause channel erosion. Non storm water discharges not already subject to existing NPDES requirement will be subject to approval and permit from RWQCB.

VI.C1. Storm Drainage Pump Stations

Limit pump discharges to the extent feasible during peak flows to minimize potential impacts from flooding. When a development requires a storm drain pump station that discharges to a stream, require discharge management plan that addresses pump operation during high water (flood) events.

VII. CHANNELIZATION

Related Resource Agency Permits: In addition to the G&S's below, these activities may require notification to Regional Water Quality Control Board, California Department of Fish and Game (i.e. Streambed Alteration Agreement), and in most cases, the US Army Corps of Engineers and their Federal consulting agencies. Applicants may choose to complete a JARPA (Joint Aquatic Resource Permit Application) if permits are required from more than one Resource Agency.

VII.A. Undergrounding Creeks

1. Streams must not be buried or put into culverts.

2. The exception for culverts only is for road crossings though they should be clear-span whenever possible. If culverts are used they must carry the bankfull flow, accommodate a modified floodplain drainage and where feasible accommodate a 100-year flow rate. This is accomplished with multi-stage culverts with cross-sections designed to carry different flows.

3. Regional debris or sediment basins that will be owned or maintained by SCVWD must be designed for 50-year sediment capacity.

4. Filling creeks to accommodate grading and construction for developments is not permissible until impact avoidance and minimization efforts are maximized. In the event that impacts are determined to be unavoidable, adequate mitigation must be proposed.

5. CEQA document must be prepared to provide mitigation for impacts of burying stream and appropriate regulatory agency permits, such as a Streambed Alteration Agreement (SAA) must be obtained. The city/county storm drain system, whether in pipes or roadside ditches, is not included in this standard.

VII.B. Open Channel Modification

1. The design must consider stream dynamics and induced flooding. A hydraulic analysis acceptable to SCVWD will be required.
2. Recommend restoration of natural stream processes if possible.
3. Impacts to habitat must be avoided or mitigated.
4. Stream conveyance area must be designed for 100-year design flow with freeboard, if along a SCVWD jurisdictional area.
5. SCVWD may request dedication of right-of-way for stream modification projects, including an 18-22 foot wide maintenance area.
6. Notify and secure appropriate state and regulatory permits, such as a SAA.

EXCEPTION: If active channel and floodplain will not contain the design 100-year flow, then the design can be based on existing capacity with the allowance for providing additional active floodplain width in the future to contain the design 100-year flow. Streams to be dedicated to SCVWD must include an 18-22 foot wide maintenance area. In addition, flood capacity less than the 100-year flow is acceptable if the community in the flood zone is willing to accept less protection and ongoing flood insurance requirements.

VIII. UTILITY ENCROACHMENTS

Related Resource Agency Permits: In addition to the G&S's below, utility encroachments may require notification to Regional Water Quality Control Board, California Department of Fish and Game (i.e. Streambed Alteration Agreement), and in most cases, the US Army Corps of Engineers and their Federal consulting agencies. Applicants may choose to complete a JARPA (Joint Aquatic Resource Permit Application) if permits are required from more than one Resource Agency.

VIII.A. Longitudinal (parallel) encroachments.
Longitudinal (parallel) encroachments are not allowed in SCVWD right-of-way.

EXCEPTION: Longitudinal encroachments are discouraged and may only be considered with demonstration that all other Alterations have been considered, there is a benefit to SCVWD and future removal will not be necessary considering SCVWD interests. No water pipelines may be installed within a levee.

VIII.B. Utilities Crossings

1. Utility pipes or conduits must go under the stream or be in or attached to the downstream face of a bridge and must go under any levees. Provide locations for future utility crossings in design of new or replacement bridges.
2. Any utilities under the stream must be concrete encased or placed in sleeve.
3. Borings must be 5 feet below lined channels and 8 feet below unlined channels. Recommend under-channel utilities be installed by directional bore.

4. For cut and cover, clearance must be a minimum of three (3) feet and based on scour depth. Replacement of fill in levees is subject to SCVWD specifications.
5. Any aerial utility crossings (e.g. PG&E and phone lines) meet minimum OSHA vertical clearance criteria. (22 feet for non-power lines, 26 feet for power lines less than 600 volts, 30 feet for power lines from 600 to 50,000 volts) to allow safe use of maintenance equipment.
6. Crossings of treated (potable and recycled) water pipelines must meet Department of Health Services clearance requirements. (see Standard Details and Specifications for standards for crossings of SCVWD pipelines and City/ County requirements for other pipeline clearances)
7. Directional drilling projects using bentonite or other lubricants to go beneath or near streams and aquatic habitats will require development of a fracout prevention and response plan describing how water quality will be protected in the event of fracout

EXCEPTIONS:
If not feasible to go under or attach to the downstream face of bridge, the utility crossing may be located on the upstream face of bridge if the design would not catch debris, would be capable of surviving impacts from floating debris in high flow, and would not hinder emergency debris removal or maintenance operations.

IX. TRAIL CONSTRUCTION

Related Resource Agency Permits: In addition to the G&S's below, trail construction may require notification to Regional Water Quality Control Board, California Department of Fish and Game (i.e. Streambed Alteration Agreement), and in most cases, the US Army Corps of Engineers and their Federal consulting agencies. Applicants may choose to complete a JARPA (Joint Aquatic Resource Permit Application) if permits are required from more than one Resource Agency.

IX.A. Design/Construction Related to Trail Construction

Joint Use Pedestrian/Bicycle Paths are encouraged along creeks. Trails must be located so as to avoid impacts to the stream and riparian areas. Paved multi use trails should be placed so as to maximize distance from stream and riparian areas. Construction must not require deep excavation within tree root zones.

EXCEPTION: Exceptions may be allowed if impacts are addressed and determined to be unavoidable in a CEQA document and approved by appropriate regulatory agencies.

IX.A2. Design/Construction Related to Trail Construction
Design must be consistent with the Santa Clara County Parks and Recreation Department's Interjurisdictional Trail Guidelines. Night lighting of trails along riparian corridors should be avoided.

EXCEPTION: Exceptions may be allowed if impacts are addressed and mitigated in a CEQA document and approved by appropriate regulatory agencies.

IX.A3. Design/Construction Related to Trail Construction
Memorial plaques along trail corridors on SCVWD right of way are subject to jurisdiction review and approval. With appropriate planning and community contribution, a memorial area recognizing community members will be considered.

IX.B. Trails on District right of way require an agreement that defines maintenance, management, and liability responsibilities of facilities.

X. SEPTIC SYSTEMS

X.A. Design Of Septic Systems
Follow requirements of RWQCB or Santa Clara County as applicable including: Leach field setback 100' from top of bank, 50' from swale, 200' from high water mark of reservoir, prohibited in 10 year floodplain or areas observed to flood from field observations. Consult with SCVWD to determine whether land feature is an active floodplain or swale and assist in determining high water marks at reservoirs.

EXCEPTION: Exceptions or variances are allowed per RWQCB or Santa Clara County requirements. Please note that since 10-year floodplain maps do not exist, any area of historical flooding should be assumed to be in the 10-year floodplain.

XI. TRASH CONTROL AND REMOVAL

XI.A. Location of Trash Bins
Locate trash bins away from streams and follow other measures outlined in NPDES guidance.

XII. PROTECTION OF WATER QUALITY

XII.A. Water Quality

1. Cities, County, and SCVWD should comply with applicable provisions of NPDES stormwater permits. Implement Infiltration Guidelines in the SCVRPPP C.3 handbook, where appropriate.

2. Retention ponds and infiltration trenches that do not meet guidelines will be reviewed by SCVWD and the Regional Water Quality Control Board.

XIII. GROUNDWATER PROTECTION

XIII.A. Groundwater
Require groundwater resource assessments when potential for significant groundwater supply or groundwater quality impacts. The changes in land use where these impacts may be significant are anticipated to be subject to CEQA

XIII.A2 Groundwater
To protect Santa Clara County groundwater recharge areas, new high risk activities defined by Department of Health Services (DHS) should be prohibited in well head protection areas as designated on District GIS Maps. Manage (limit, monitor and implement best management practices) existing high risk activities in recharge areas of basin.

XIII.A3. Groundwater
The owners must show any existing wells on the plans. The wells must be properly registered with the SCVWD and either be maintained or destroyed in accordance with SCVWD standards.

XIV. FLOOD PROTECTION

XIV.A. Flooding Protection
1. For development within special flood hazard zones A, AE, AH, AO, the project must comply with FEMA requirements as implemented by the City or County.

2. Consider when and how to recommend increased levels of protection as described in Dept of Water Resources Model Floodplain Ordinance, recommendations of California Floodplain Management Task Force (Dec 2002), and FEMA's Community Rating System Program.

EXCEPTION: Exceptions or variances allowed per City or County Ordinances, Policies, or other implementation documents.

XIV.A2. Flooding Protection
In zone A (areas where base flood elevations have not been determined) require a hydraulic analysis to determine the base flood elevation for subdivisions greater than 5 acres or 50 lots whichever is lesser. For other construction and substantial improvements, utilize any other available base flood elevation data as criteria for meeting NFIP requirements.

XIV.A3. Flooding Protection
If a proposed project will result in a significant increase in land use density[1] (i.e. an agricultural area changes to residential or industrial), the local jurisdiction should work cooperatively with SCVWD to determine (1) what information is needed on a project specific basis to evaluate potential increases in flood flows and (2) what mitigation measures can be implemented to mitigate for impacts to flood conveyance capacity and/or flood protection.

Detention basins may be used to mitigate the impact, but they must be properly designed and maintained. Design should be in concert with hydromodification facilities and consider regional solutions.

XIV.A4. Flood Protection
For major developments near streams subject to CEQA review that are compatible with the General Plan utilized for developing District hydrology and FEMA floodmaps, development must not, increase site runoff so as to increase depth (0.1 foot increase in water surface) or lateral extent of flooding or increase discharge in local streams as outlined in the storm water permit for the SCVURPPP.

A hydraulic analysis prepared by registered civil engineer demonstrating that any flood impacts will not be created is required.

[1] The District's hydrology and design flood flow rates were developed in the late 1970's using the land use designations shown on General Plans in place at that time. These flow rates have recently been updated, but the impact has not yet been analyzed. In general, the changes in land use that could significantly impact runoff quantities are typically those outside the urban service area, in south county and those developments where the change in land use will be subject to CEQA review. The impacts to be addressed are to flood conveyance facilities designed using 1978 (or prior) flow rates and built to provide 100 year flood protection and impacts to flood prone areas which were also determined using the 1978 flow rates.

CHAPTER 4

DESIGN GUIDES FOR GUIDELINES AND STANDARDS

GUIDE	TITLE	PAGE
	Introduction to the Design Guide	4.2
1	Protection of existing riparian vegetation (G&S I.B)	4.3
2	Use of local native species (G&S I.B AND I.C)	4.5
3	Use of Ornamental or non-native species (G&S I.C.2)	4.7
4	Riparian revegetation or mitigation projects (G&S I.C)	4.9
5	Temporary erosion control options (G&S I.C.3 & IV.B.7)	4.11
6	Placement of fill and planting of trees by levees (G&S I.C.4)	4.13
7	Slope stability protection area (G&S II.A)	4.14
8	SCVWD freeboard requirements (G&S III.B.4)	4.15
9	Grading adjacent to creeks and SCVWD right of way (G&S V.A)	4.16
10	Plant species for vegetated buffers and swales (G&S IV)	4.20
11	Specifications for placement of fill on SCVWD levees (G&S V.B.2)	4.21
12	Outfall standards (G&S VI.B.3)	4.22
13	Flap gate structure (G&S VI.B.5)	4.43
14	SCVWD water pipeline crossing (G&S VIII.B.6)	4.45
15	Utility crossing under creeks (G&S VIII.B.1)	4.49
16	Guidance for Trail Design (G&S IX)	4.51
17	Groundwater resource assessment criteria (G&S XIII.A)	4.60
18	Detention basin design (G&S XIV.A.3)	4.61
19	Bank protection repair guide (G&S IV)	4.65

INTRODUCTION TO THE DESIGN GUIDE

I. PURPOSE

The Guidelines and Standards (G&S's) were developed by the Santa Clara Valley Water Resources Protection Collaborative (Collaborative) to address land use near streams and protect surface and groundwater quality and quantity in Santa Clara County. The goal was to develop and implement a consistent set of G&S's to enhance water and watershed resource protection through local agency land use planning and permitting. The Proposed G&S's provide guidance for addressing a wide range of activities (including riparian habitat protection, slope stability, erosion control, trail construction, grading). The purpose of the Design Guides is to provide further detail and clarification on specific application of the G&S's.

II. AUDIENCE

The audience for this Design Guides is city/County/SCVWD staff responsible for reviewing and permitting project applications. The G&S's and these related Design Guides are to be used as appropriate by permitting agency staff in reviewing all of the various permits required for development on affected streamside parcels (unless an exempt single family use on an already developed lot). This would include permits for grading, drainage, structures, landscaping, planning, zoning and any other related activities and improvements.

III. INTEGRATION INTO EXISTING PROCESSES

The Design Guides included are models to be incorporated as appropriate by local agencies into their existing practices. In general, the content of the Design Guides is fairly consistent with existing practices of the SCVWD and local jurisdictions. It is anticipated that these Design Guides will be used unless determined otherwise by agreement between the local agency and SCVWD. Where there is a variety of options, the preferred option is indicated.
It is acknowledged, however, that the preferred option may not always be feasible or preferred depending on the circumstances, so other options, which are allowable but not typically recommended have been included as well.

IV. PROTECTION OF STREAM RESOURCES

A major purpose of providing the Design Guides is to protect and enhance streams and streamside natural resources. When deciding on what type of improvements to be made to a streamside parcel, please keep in mind what is best for the ecological health of the stream. If there is a conflict between a Design Guides and a specific G&S, staff should defer to the G&S. Some judgment will need to be made based on site-specific conditions and the dynamic nature of stream systems.

PROTECTION OF EXISTING RIPARIAN VEGETATION

INTRODUCTION

This Design Guide is designed to provide more detail to G&S I.B on protection of native riparian plants. The G&S's include several requirements related to the protection, removal and planting of riparian vegetation for new and major development. The sections that follow provide more detail on how to best implement these requirements. They also serve as helpful guidelines for single family home owners involved in landscaping and revegetation projects.

THE IMPORTANCE OF RIPARIAN VEGETATION

Riparian vegetation plays a vital role in maintaining stream stability, providing valuable wildlife habitat, and moderating downstream flooding. In addition, the presence and/or absence of riparian areas is directly correlated to water quality as the riparian vegetation serves to filter pollutants from stormwater, such as oil and grease from roadways, fertilizer runoff from lawns, and excess sediments from upstream.

Due to the importance and relative lack of riparian vegetation in Santa Clara County, particularly in urban areas, one goal of any planning project is **to avoid removal of any native riparian vegetation and to prevent the types of conditions that would threaten or degrade existing riparian habitat and/or contribute to soil loss** critical to the continued health and regeneration of riparian trees. To this end, all development activities need to be outside this riparian corridor where at all possible. Any exceptions to this rule need to be justified and mitigated.

VALUE OF ESTABLISHING RIPARIAN BUFFERS

The amount and condition of the riparian habitat has been significantly reduced in Santa Clara County over time, primarily due to channel encroachment and modification. This has led to incised channels, as well as a lowering of the water table, loss of riparian vegetation, decline in water quality and most beneficial uses, as well as increased risk of erosion, bank failure and flooding. To stop and reverse this trend, an additional buffer area should be established between the edge of the existing riparian zone and any development, where feasible. This buffer should be planted with native vegetation in order to better protect the riparian corridor and the watercourse. The goal is to eventually establish and increase the riparian buffer area all along the riparian corridor. The value of riparian buffers areas has been well documented, in addition to reducing flash runoff and improving water quality, they provide supplemental foraging resources and corridors for wildlife to access the streams and even increase streamside property values.

This Design Guide describes standard criteria for determining how far from existing riparian habitat to locate construction and development activities in order to help ensure its protection. The Design Guides that follow provide more detail on the types of plants to use in landscaping and revegetation of areas, in or adjacent, to riparian areas. For more information on design of trails in specific, see Design Guide number 15.

CALCULATING RECOMMENDED TREE PROTECTION ZONES

Calculation of the recommended distance between an existing riparian tree and closest construction, staff need to consider at least three variables:

1. The maturity of the tree
2. The trunk diameter
3. The sensitivity (or tolerance) of that particular species to nearby activities

To calculate recommended minimum distance for each species, please use the species-specific formula shown on page 74 of 'Trees and Development, A Technical Guide to Preservation of Trees During Land Development' by Matheny and Clark. This book published in 1998 by the International Society of Arboriculture (http://www.isa-arbor.com/publications/publications.aspx) integrates the three criteria into an optimal offset distance for development or trail construction, or the "Tree Protection Zone", (Chart to be inserted pending copyright permission.)

If excavation occurs inside the identified "Tree Protection Zone", roots will be severed, the tree's health will decline, the incidence of insect and diseases will increase and people may be endangered by eventual failure of the destabilized tree. Where there are other site constraints, anticipated encroachment within the recommended tree protection zone, an arborist should be consulted to determine the appropriate protection measures or alternative setbacks.

EXAMPLE TREE PROTECTION ZONES

Western Cottonwood (Populus fremontii): Poor Tolerance
The Western Cottonwood has a poor tolerance to root disturbance. The tree protection zone for an overmature tree is 1.5′ per inch of tree diameter or a 45 foot radius for a 30 inch diameter tree. Other trees with a poor tolerance include the black cottonwood and bigleaf maple.

Western Sycamore (Platanus racemosa): Moderate Tolerance
A Western Sycamore has a moderate sensitivity to impacts around its roots. The tree protection zone for an overmature tree measured from its trunk is 1.25 feet per inch of trunk diameter. A 30″ diameter mature Western Sycamore needs a tree protection zone with a 37.5′ radius. Other species with a moderate tolerance include the valley oak, California bay and willows.

Coast Live Oak (Quercus agrifolia): Good Tolerance
The Coast Live Oak has a good tolerance to disturbance. The species is sensitive to the addition of fill around its trunk and does not tolerate frequent summer watering. The tree protection zone for a mature tree is one foot per inch of trunk diameter. A 30 inch diameter tree needs a protection zone with a 30 foot radius. Other trees with a good tolerance include alders, box elders, and California buckeye.

USE OF LOCAL NATIVE SPECIES

INTRODUCTION

The use of locally native plants for all landscaping and revegetation projects adjacent to streams and riparian areas is required for new and major redevelopment. It should also be the preferred choice for homeowners involved in any landscaping and revegetation projects within the riparian corridor since native plants are ecologically best suited to a particular creek environment and will provide the most habitat and slope protection with the least amount of maintenance over time.

HOW TO FIND AND SELECT NATIVES IN THE WATERSHED

When vegetating the creek, choose species growing nearby and make sure the plants used were propagated from seeds, cuttings or divisions collected from the same local creek or watershed. Try local home-grown native plants via direct installation of seeds, divisions and cuttings on the creek bank. Oaks, buckeye and bay trees are easy to grow from seed planted directly into moist creek bank soil. Cottonwood and willow are easy to grow from cuttings stuck directly into moist sandbars. California rose, California blackberry, snowberry, mugwort, beardless wildrye and others can be propagated readily from vegetative offsets and division.

GUIDELINES FOR PLANTING NATIVE SPECIES

- Geared toward establishing or enhancing the native habitat.
- **Ensure that the initial planting density is high,** averaging 6 to 12 feet on center, to create canopy coverage and closure quickly. Include a range of species in the plant palette to fill in the understory, mid-story and overstory.
- **Avoid hardscape** such as patios, walkways and decks within these areas to minimize human impacts and maximize habitat value.
- **Maintain and monitor plantings** for a 3 to 5 year period to ensure healthy establishment. Performance and success criteria include percentage of allowable mortality and goals for an annual percentage of vegetative cover.
- Slowly eliminate the need for human intervention, including irrigation, weed control, replanting, pruning, etc. The final goal is to discontinue maintenance activities when habitat is self sustainable.

California Native Plant Society's Web site:
www.cnps.org

LIST OF NATIVE PLANT SPECIES

The following list is a conglomerate of riparian plant species that exist within the boundaries of Santa Clara County. The distribution of one plant may or may not overlap with the next one on the list. Some of them would never be seen together in the wild due to preferences for different microclimates, soil substrates and hydrologic regimes. If you are unfamiliar with local native plant ecology, consult local experts for help selecting the best plant palette for your particular creek or follow Nature's example and copy what you see in a wild area located close to your project site.

TREES:

Big Leaf Maple
Acer macrophyllum

California Box Elder
Acer negundo var.californicum

California Buckeye
Aesculus californica

White Alder
Alnus rhombifolia

Western Sycamore
Platanus racemosa

Fremont Cottonwood
Populus fremontii ssp. fremontii

Black Cottonwood
Poplus trichocarpa

Coast Live Oak
Quercus agrifolia

Valley Oak
Quercus lobata

Narrow-leaved Willow
Salix exigua

Red Willow
Salix laevigata

Yellow Willow
Salix lucida ssp. lasiandra

Arroyo Willow
Salix lasiolepis

Blue Elderberry
Sambucus mexicana

California Bay Laurel
Umbellularia californica

SHRUBS AND VINES:

California Sagebrush
Artemisia californica

Mule Fat
Baccharis salicifolia

Virgin's Bower
Clematis ligusticifolia

Toyon
Heteromeles arbutifolia

Coffeeberry
Rhamnus californica

California Wild Grape
Vitus californica

Brown Dogwood
Cornus glabrata

California Rose
Rosa californica

California Blackberry
Rubus ursinus

Snowberry
Symphoricarpos albus var. laevigatus

GROUND COVERS AND HERBACEOUS PERENNIALS:

Mugwort
Artemisia douglasiana

Western Aster
Aster chilensis

Douglas' Baccharis
Baccharis douglasii

Western Goldenrod
Euthamia occidentalis

Beardless Wildrye
Leymus triticoides

Sticky Monkey Flower
Mimulus aurantiacus

California Figwort
Scrophularia californica

California Native Plant Society's Web site:
www.cnps.org

USE OF ORNAMENTAL OR NON-NATIVE LANDSCAPING

INTRODUCTION

If the use of local native plants propagated from local stock does not fit your landscaping goals, choose:

- **Non invasive drought-tolerant, non native ornamental plants** having no potential to cross pollinate native riparian species. For example, if native valley and coast live oaks, willows, sycamores or cottonwoods exist in the riparian corridor, don't plant ornamental oaks, willows, sycamores or poplars.
- **Non invasive, drought tolerant, non-local California natives** (aka ornamental natives), with no potential to cross-pollinate local native species; for example- Fremontodendron or Romneya.

When selecting plants and choosing their location in an ornamental landscape, the project design goals are generally geared to human aesthetics. In choosing ornamental landscaping, hardscape features, such as patios, decks, and walkways, are design components. **These features should be avoided within the riparian habitat area at all locations.**

PLANT SELECTION GUIDE

The choices of plants that meet the criteria described above for ornamental landscaping is vast. Selection of a plant species for a particular site will depend on goals of the landscape plan, site constraints, the owner's desires and budget. There are a variety of resources available from which selections can be made. Cities generally have plant lists available that were assembled for water conservation purposes. The East Bay Municipal Utility District has prepared a book, entitled "Plants and Landscapes for Summer Dry Climates" and the Sunset Western Garden Book, commonly available at most nurseries, has plant selections identified that are suitable for dry places. **Select plants from these sources as long as you avoid invasive plants and take the caution provided above for selecting native species that have not been propagated from your local watershed.**

REFERENCES

The California Native Plant Society's 'Guidelines for Protecting Native Plants from Genetic Degradation' is a helpful reference on the subject.

NON – LOCAL CALIFORNIA NATIVE PLANTS

The following California native plants have a very low potential of hybridizing with our Santa Clara County natives since they do not naturally occur in northern California

TREES

Chilopsis linearis, (Desert Willow), Lyonothamnus floribundus, (Catalina Ironwood), Prosopis glandulosa var. torreyana, (Mesquite)

SHRUBS

Fremontodendron californicum or Fremontodendron mexicanum, (Flannel Bush), Galvesia speciosa, (Island Bush Snapdragon) Rhus integrifolia, (Lemonade Berry), Rhus ovata, (Sugar Bush), Romneya coulteri, (Matilija Poppy), Simmondsia chinensis, (Jojoba)

California Invasive Plant Council Web site:
www.cal-ipc.org

COMMONLY FOUND INVASIVE SPECIES TO BE AVOIDED

Acacia
Acacia spp.

Almond
Prunus dulcis

Ash, evergreen
Fraxinus uhdei

Bamboo, running types
Arundinaria, chimonobambusa, phyllostachys, etc.

Black locust
Robinia pseudoacacia

Broom, french
Genista monspessulana, previously cytisus monspessulanus

Broom, scotch
Cytisus scoparius

Broom, spanish
Spartium junceum

Cape weed
Arctotheca calendula

Cotoneaster
Cotoneaster spp.

Elm
Ulmus spp.

Eucalyptus
Eucalyptus spp.

Fig
Ficus carica

Flowering plum, fruitful varieties
Prunus spp.

Fountain grass
Pennisetum setaceum); purple variety "cupreum" is sterile and acceptable

Foxglove
Digitalis purpurea

Giant reed
Arundo donax

Glossy privet
Ligustrum lucidum

Gorse
Ulex europaea

Himalayan blackberry
Rubus discolor

Holly oak
Quercus ilex

Iceplants
Carpobrotus edulis, c. Chilensis, mesembryanthemum spp.

Ivy, algerian
Hedera canariensis

Ivy, cape
Delairea odorata, previously senecio mikanioides

Ivy, english
Hedera helix

Kikuyu grass
Pennisetum clandestinum

Lemon balm
Melissa officinalis

Lombardy poplar
Populus nigra 'italica'

London plane tree
Platanus acerifolia

Mint, any kind including pennyroyal, peppermint, spearmint
Mentha spp.

Monterey pine
Pinus radiata

Myoporum
Myoporum laetum

Olive
Olea europaea

Pampas grass, jubata grass
Cortaderia selloana, C. Jubata

Pepper trees
Schinus spp.

Periwinkle
Vinca major

Pyracantha
Pyracantha spp.

Tamarisk, salt cedar
Tamarix spp.

Tree of heaven
Ailanthus altissima

Walnut, english or black
Juglans regia, juglans californica var. Hindsii

Find it at: http://www.cnps.org/archives/archives.htm

Scroll down to:

1) Policies and Guidelines
2) Conservation Policies
3) Guidelines for Landscaping to Protect Native Vegetation from Genetic Degradation.

California Invasive Plant Council Web site:
www.cal-ipc.org

RIPARIAN REVEGETATION OR MITIGATION PROJECTS

INTRODUCTION

This Design Guide is most applicable for larger scale revegetation or mitigation projects but also provides helpful information for anyone planning a revegetation project. Because of the complexity of revegetation design and the variety of ecosystems that exist within the county, it is nearly impossible to create succinct detailed Design Guidelines. Instead, a list of general, broad brush design planning guidelines is included below for riparian revegetation projects in Santa Clara County. Each individual project should be mentored through all stages of project planning and design by experienced biological staff on a case by case basis.

WATERSHED FIDELITY

- **To preserve genetic integrity in county watersheds, propagation material (seeds, cuttings, divisions) must originate from local native stock, i.e. individuals found as close as possible to the project site and within the same watershed.**
- If propagation material cannot be obtained from within the watershed, material may be collected from an immediately adjacent watershed that shares common ecological characteristics (climate, elevation, soil type, headwaters in the same mountain range, etc.).
- An ecological justification is required before any species may be planted using container stock grown from propagules that originate outside Santa Clara County.

SEED AND CONTAINER PLANTS

- Direct seeding should be used when possible. Quercus sp. and Aesculus californica have high success rates when installed in this manner.
- Direct stuck cuttings of willows, cottonwoods and mule fat is encouraged.
- Containerized native plants for revegetation or landscape plantings should be grown and installed in the smaller, deeper container sizes typically offered by revegetation nurseries rather than commercial nurseries to ensure they are healthy. For that reason, quality native plants will normally be smaller and younger than conventional nursery container stock, usually 1-gallon equivalent or smaller size. **Contract nursery production takes one-year minimum lead time before installation. Designers should take these factors into account when commitments are made to project stakeholders.**

SPECIES SELECTION

- Select plant species that are historically and ecologically appropriate to the project area unless site conditions have been radically modified. The plant palette should be well-suited to these conditions and blend with the existing native vegetation types.
- Non-local, showy, native **"landscape" species should not be intermingled with native revegetation species on projects where habitat restoration is the goal.**
- Do not plant invasive, non-native species near streams.

DESIGN CRITERIA

- Revegetation design should be predicated upon thorough analysis of groundwater and surface water hydrology, soil profiles, and other physical information obtained from direct site investigations. Existing site conditions should be preserved and modification into an artificially sustained condition should be discouraged.
- Revegetation projects should be designed to quickly attain sustainability rather than to require long-term human intervention.
- Irrigation, weed and pest control, soil manipulation, etc., should become unnecessary within one to three years.
- Land use on adjacent sites that could disrupt or damage the project goals should be factored into design decisions for revegetation projects.
- Experienced biological staff should be active participants during the entire design process for revegetation, native landscape, mixed (native & non-native) landscape, erosion control, etc. plans and specifications.

California Native Plant Society Web site:
www.cnps.org

TEMPORARY EROSION CONTROL OPTIONS

INTRODUCTION

This design guide provides more detail on G&S I.C.3 and GS IV.B.7 by explaining what steps can be taken during post construction to provide erosion control in short order on stream banks through temporary vegetative measures. These measures are typically employed:

- when the grading and/or construction is being done in phases,
- when it does not make sense to plant more permanent vegetation or
- if grading and/or construction has not been completed by the rainy season.

These temporary techniques are also sometimes used in conjunction with final more permanent revegetation. The following guidelines can be used to determine if and how erosion control seed mixes should be used.

SEED MIXES TO BE AVOIDED

Some commercially available seed mixes contain species, which are invasive weeds, aggressive competitors with native plants and/or future fire hazards. **These seed mixes should be excluded from streamside areas.** Examples are Blando brome, rose or red clover and annual rye.

EROSION CONTROL OPTIONS FOR WORK SITES WITH EXISTING NATIVE PLANTS

These erosion control options should be followed in most areas along natural creeks, where native trees, shrubs and herbs reside on or near the work site. A site visit or referral of a good series of photos to a landscape professional familiar with native plants or a revegetation specialist may be needed to determine the best approach.

If no irrigation is available, if the slope is very steep, or if it's late in the season

- Use a non-biological method, such as straw, straw with tackifier, erosion control blankets (jute netting with straw or coir filling), etc. instead of seeding.

Benefits:

- The blankets are functional immediately after installation.
- The adjacent native plants will fill in at their own pace.

Use if there is absolutely no time to investigate site conditions.

- Use a Failsafe mix with 50 lb/ac 'Regreen' sterile wheat (Triticum X Elymus 'Regreen'), with 95% minimum purity, and minimum germination of 85%.

Benefits:

- This plant mix makes few if any seeds, so it cannot become a weed, and it usually lives only one year.
- The adjacent native plants can seed in thereafter.

EROSION CONTROL OPTIONS FOR WORK SITES WITHOUT EXISTING NATIVE PLANTS

These erosion control options should be followed in areas where there is no remaining native vegetation for miles around. An example of such a site is the back slope of a levee in an urbanized area.

For Sunny Slopes 3:1 or Flatter

- **California Native Grass**
  Use a mix of:
  Prostrate Hordeum californicum (Prostrate California Barley) @ 16 lb/ac, minimum purity 90%, minimum germination 80%.

  Elymus glaucus 'Berkeley' ('Berkeley' Blue Wildrye) @12 lb/ac, minimum purity 95%, minimum germination 85%

  Bromus carinatus 'S.F. Bay Area'('S. F. Bay Area'California Brome) @ 10 lb/ac, minimum purity 95%, minimum germination 85%
- **Failsafe mix**

  50 lb/ac 'Regreen' sterile wheat (Triticum X Elymus 'Regreen'), minimum purity 95%, minimum germination 85%
- **Non-biological method** as outlined above

For Slopes 2:1 or Steeper

- **California Native Grasses PLUS Mix**
  Use the mix for Slopes 3:1 or Flatter PLUS Vulpia microstachys (Three Weeks Fescue) @ 5 lb/ac, minimum purity 95%, minimum germination 70%
- **Failsafe mix**
  50 lb/ac 'Regreen' sterile wheat (Triticum X Elymus 'Regreen'), minimum purity 95%, minimum germination 85%.
- **Non-biological method** as outlined above

PLACEMENT OF FILL AND PLANTING OF TREES BY LEVEES

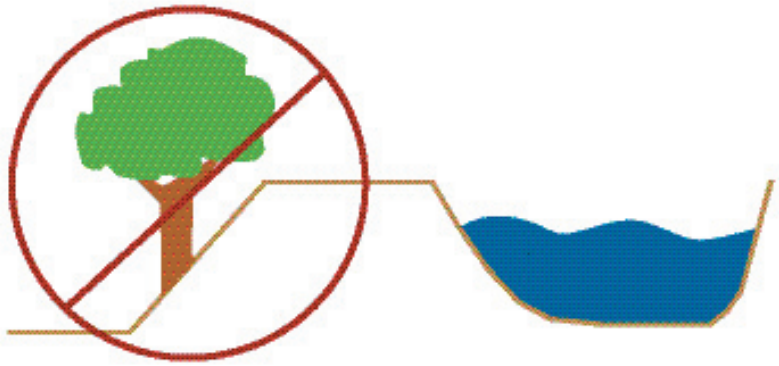

Plants with large root systems (trees and large shrubs) should not be placed on existing levees.

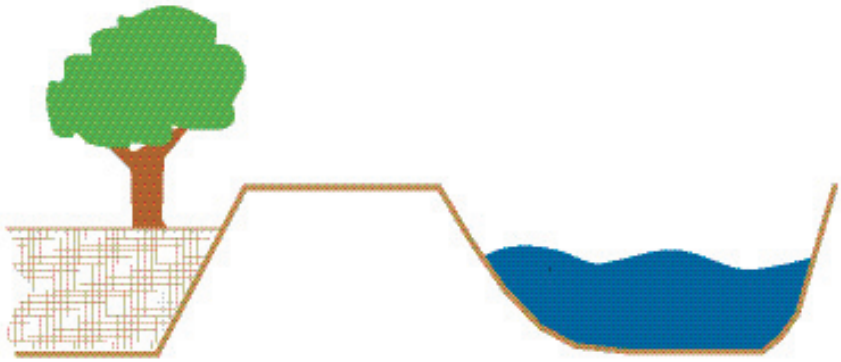

Trees may planted on a levee if additional fill is placed on the levee.

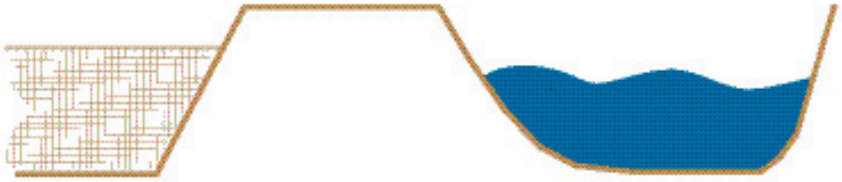

The placement of fill on/next to the out board slope of the levee will reduce the height of the levee for aesthetics and improves the safety of the levee system. The height of the fill may vary. Geotechnical analyses may be needed to determine the impacts of the fill to the levee slope.

SLOPE STABILITY PROTECTION AREA

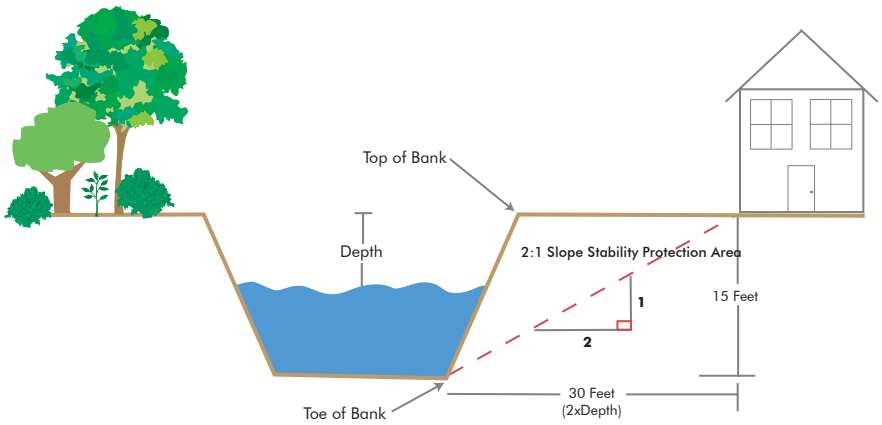

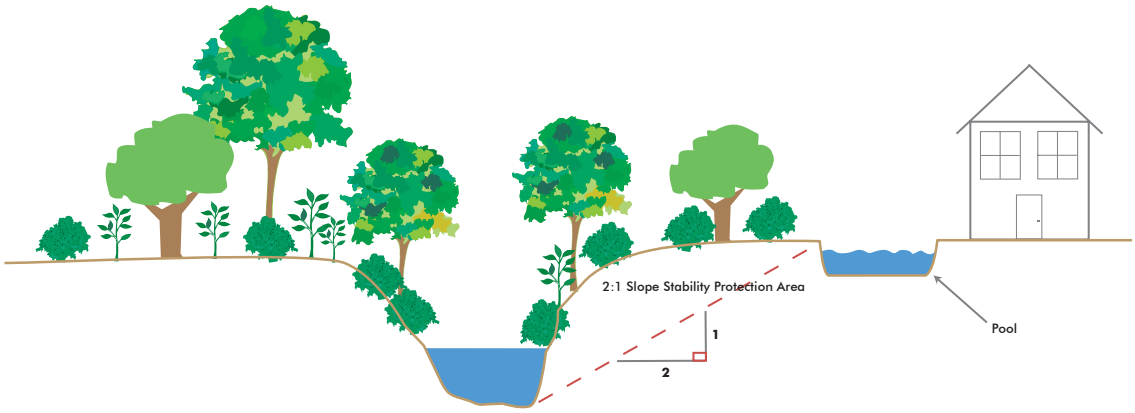

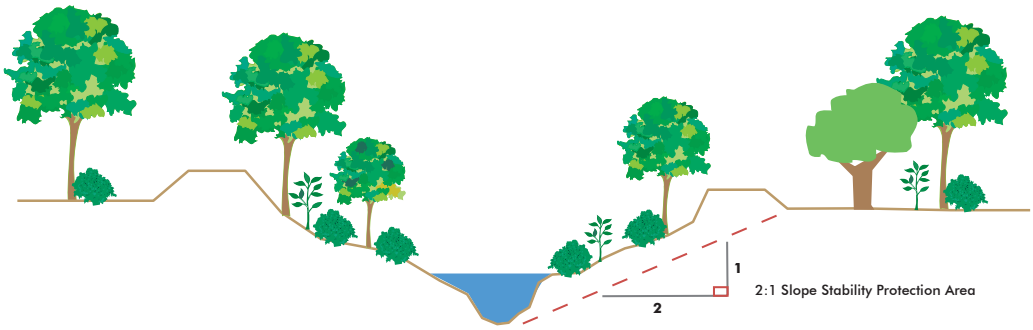

Note: While accessory structures are typically exempt, it is still recommended to locate them outside the 2:1 Slope Stability Protection Area in order to protect the structures, creek bank, and habitat.

GUIDELINES FOR ESTABLISHING FREEBOARD FOR BRIDGE CROSSINGS AND FLOOD PROTECTION PROJECTS

BACKGROUND

Freeboard is the additional capacity in a stream above the calculated capacity required for the 1 percent flow. Freeboard provides a safety factor for such things as normal wave action, inaccuracies in determination of friction factors, and minor silt and debris deposits. **The freeboard guidelines should also be followed when streams are modified as part of major land development proposals.** The Federal Emergency Management Agency (FEMA) has set guidelines for the determination of freeboard. In order for an area to be removed from a flood zone designated by FEMA following completion of a flood control project, the project must meet the FEMA guidelines. These freeboard guidelines are followed by the SCVWD in the design of flood protection projects **and should be followed for the design of bridges and other street crossings.**

A. Where the design water surface[1] is above natural ground, the following criteria shall be considered a minimum:

1. Federal Emergency Management Agency (FEMA) guidelines. FEMA currently specifies that levees shall have a minimum of 3 feet of freeboard with an additional foot of freeboard required 100 feet on either side of structures that are within the leveed section of creek or where the flow is constricted such as at bridges. FEMA also requires an additional ½ foot above the minimum at the upstream end of the levee, tapering to not less than the minimum at the downstream end of the levee. To comply with these requirements, use as a minimum 3½ feet of freeboard within leveed sections and 4 feet within 100 feet of bridges or other constrictions.
2. For floodwalls, use the same freeboard criteria as for levees. (Basis—SCVWD guideline)
3. If two-tenths of the total energy (depth of flow + [v2/2g]) is greater than the freeboard requirement of A-1 or A-2 above, then the computed value shall be used for freeboard. (Basis—Natural Resource Conservation Service [NRCS] guideline)

B. Where the design water surface is below natural ground, the following criteria shall be considered a minimum:

1. One foot of freeboard shall be used for constructed, nonnatural channels where large amounts of vegetation are not anticipated in the channel. (Basis—Corps of Engineers guideline)
2. For all channels, if two-tenths of the total energy is greater than the freeboard requirement of B-1 above, then the computed value shall be used for freeboard. (Basis—NRCS guideline)

C. For bridges, the following criteria shall be considered minimum:

1. At new bridges, freeboard shall be the same as in the existing or proposed channel either upstream or downstream, whichever is greater. When the bridge structure encroaches into the freeboard area, there shall not be an increase in water surface for bank full flow. The intent is to define a system (bridge and channel) with a uniform level of protection. (Basis—SCVWD guideline)

[1] Defined by recent flood protection projects or determined according to local topography and site conditions. For more information, contact SCVWD.

2. Where an existing bridge or culvert can convey the design flow under pressure, it must be structurally sound and must be able to resist the resultant lateral and uplift forces.
(Basis—SCVWD guideline)

D. Other Considerations:

1. Evaluate all bridges with debris loads on the piers. (suggest Corps practice of three times pier diameter as blockage)
2. Freeboard should also contain the flow defined by the 80 percent confidence limit statistical parameter where practical to do so.
3. All channels with super-critical flow will use sequent depth plus freeboard.
4. All channels will include freeboard for super-elevation of water surface at curves in addition to requirements specified in Sections A, B, and C above.
5. In areas of the County where there is the possibility of continued land surface subsidence, additional freeboard allowances should be considered.

GRADING OPTIONS NEXT TO STREAMS

INTRODUCTION

The details in this Design Guide are intended to provide clarification to G&S V.A, which calls for all grading next to streams to address drainage and avoid the concentration of flow over the stream bank. For all major redevelopment and new development, grading should be addressed in stormwater permit provisions. The applicants will have to observe urban runoff pollution prevention regulations during grading operations. In addition, the following grading guidelines would also be useful to single family homeowners interested in minimizing erosion and saturation of the streambank and maintaining slope stability and riparian habitat.

ADDITIONAL INFORMATION REQUIRED

In addition to the urban runoff pollution prevention regulations, permit applicants should also be asked to provide the following information:

- Existing trees that are to remain and those proposed to be removed
- The species of tree and its diameter at 4 feet from the ground
- Source of fill and hazmat certification

This will help in assess if the proposed grading method is the most appropriate for the site so as to avoid other impacts.

OPTIONS FOR GRADING

This Design Guide provides 5 options of how to design grading. Any other proposal which satisfactorily meets the goals of preventing over-bank drainage and the placement of fill along the riparian protection area by future lot owners may be considered. The selection of a particular option will be influenced by a site's finished grades needed to provide for streets, building pads and positive drainage to the storm sewer system.

Option #1 is the preferred option because it avoids disturbance to the riparian corridor and does not direct drainage over bank.

In other cases, applicants might need to use one of the Options 2- 5, because of the need to raise the site elevation. Option 2 avoids disturbance to the riparian corridor and minimizes the drainage directed over bank. Options 3 and 4 are similar but more costly. Option 5 would only be suitable if there is no riparian vegetation and it conforms to adjacent property upstream and downstream. **Fill placed within the riparian area should be suitable for planting.**

GRADING OPTIONS NEXT TO STREAMS

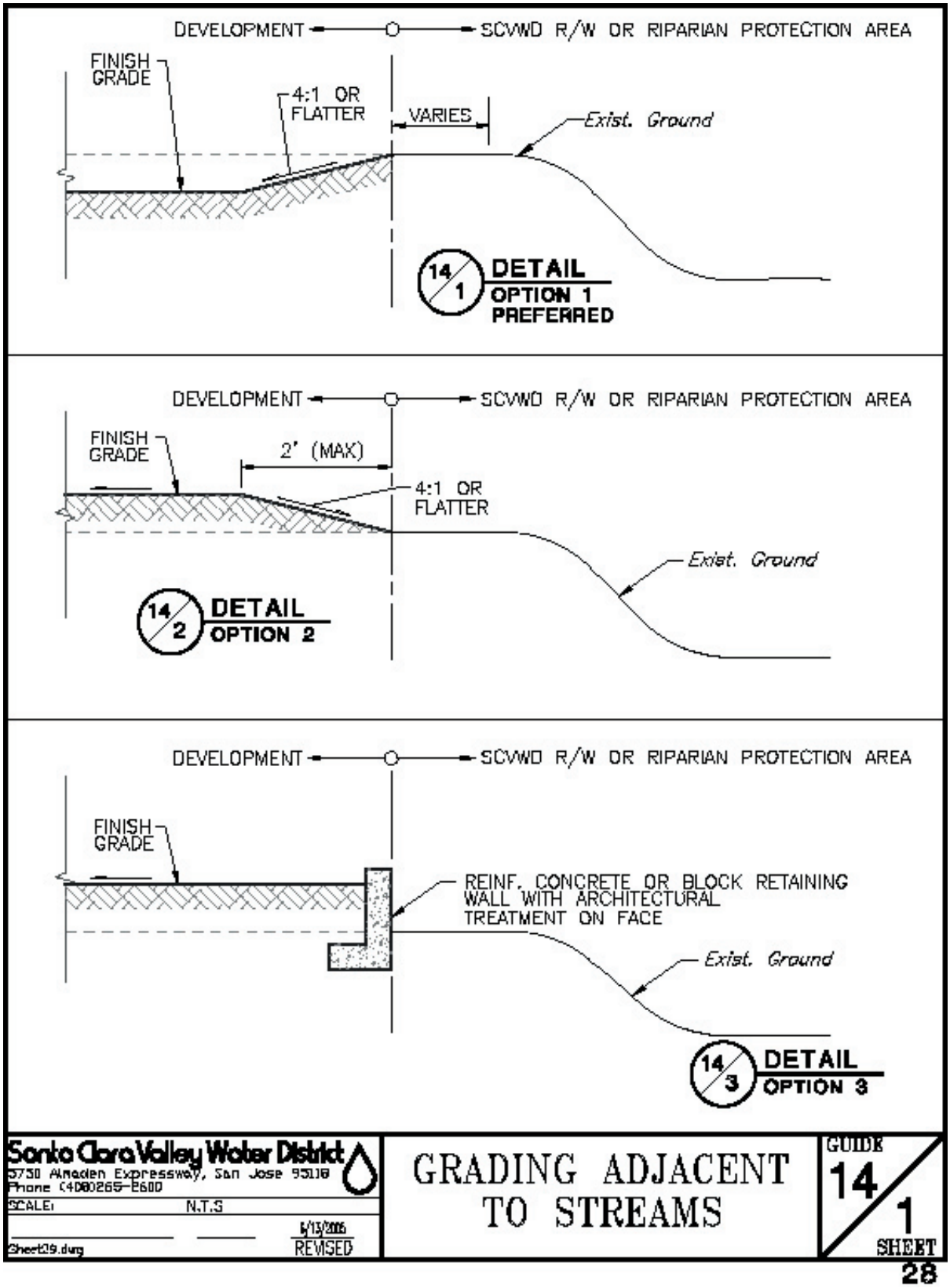

GRADING OPTIONS NEXT TO STREAMS

Option 5 is not the preferred option because placement of fill in riparian areas can damage stream side resources. If fill must be used in riparian areas, the type of fill used must support riparian vegetation and the area should be revegetated.

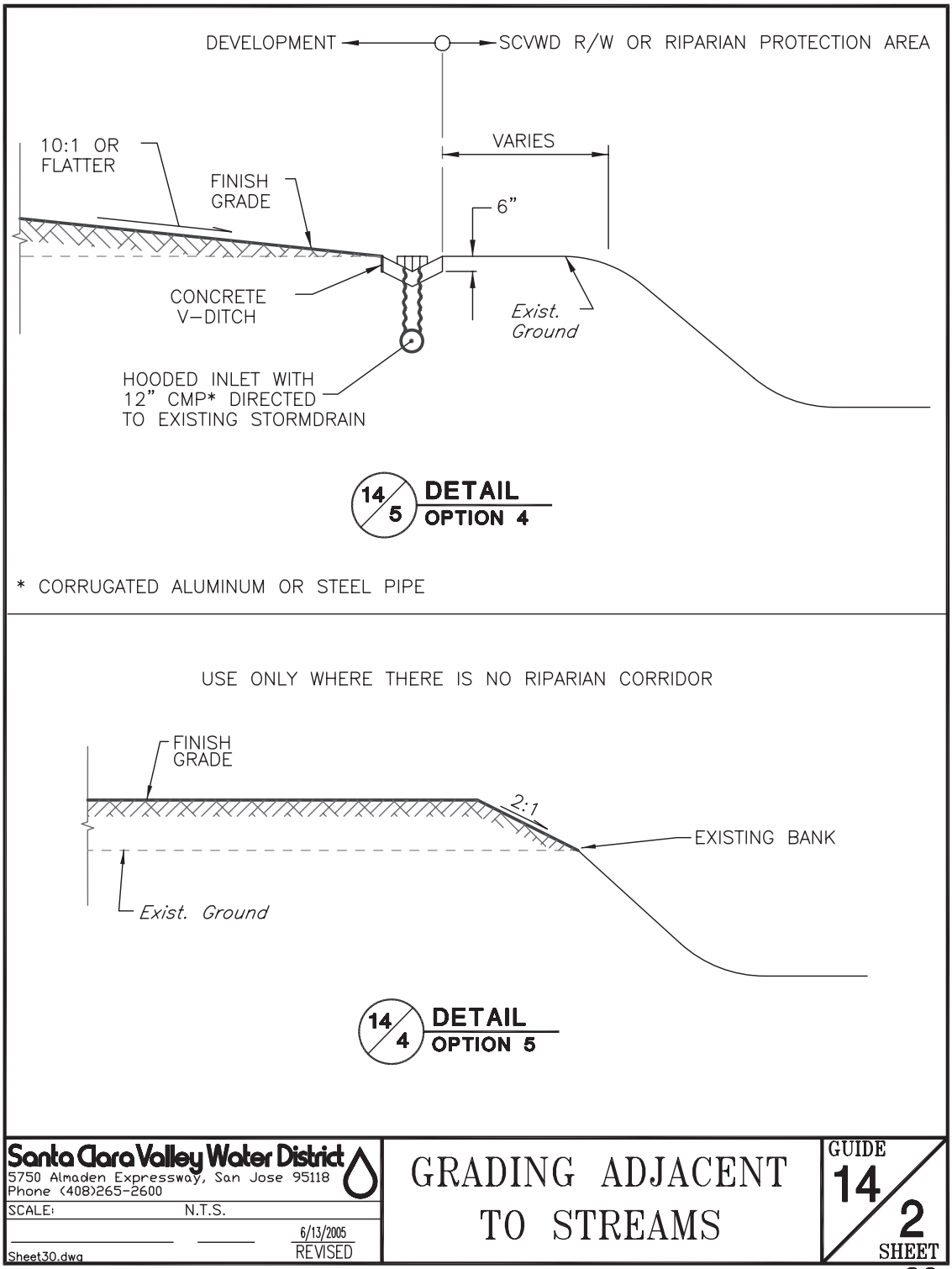

GRADING AND DRAINAGE

Use of Vegetated Swales or Buffer Strips

INTRODUCTION

The Guidelines and Standards Section V on Grading and Section VI on Outfalls and Site Drainage refer to the use of vegetated swales or buffer strips. A vegetated swale (a.k.a. grassed channel, dry swale, wet swale or biofilter) is a broad, shallow channel with a dense stand of vegetation designed to trap particulate pollutants (suspended solids and trace metals). Vegetated swales are fairly straight forward to design and can be easily incorporated into a project's site drainage plan. For all major redevelopment and new development, vegetated swales may be included in the stormwater permit; however, they are also a good practice for single family homeowners to consider incorporating in landscaping and design plans.

The benefits of using vegetated swales or buffer strips next to streams are that they:

1. Improve the quality of stormwater runoff and reduce or slow the velocity of runoff from hardened or paved areas
2. Allow for infiltration
3. Provide an opportunity for sediment and pollutants to be filtered and removed from the runoff.

The swales can be located within landscaped or turf areas and can collect runoff from patios, driveways, roof drains, parking lots. Discharge from the swale should be to a storm drain system, which will ultimately discharge to a stream.

DESIGN ELEMENTS

- Gentle side slopes: 3 horizontal to 1 vertical slope maximum
- Minimal longitudinal slope: 1% to 2% recommended. If greater, install check dams to reduce velocity. Do not use swales on slopes greater than 6%
- Flowpath length: Minimum of 10 feet
- Bottom width: 2 to 8 feet. Consider access with mowing equipment if turf grasses are used.

RECOMMENDED TYPES OF VEGETATION TO USE

There is a variety of vegetation, including trees, shrubs, groundcover and grasses that are suitable for periodic inundation. One goal is to select plants that will thrive at the site. Near streams, native plants and wetland vegetation are preferred to turf grasses as swale liners because they offer higher resistance to flow and provide a better environment for filtering and trapping pollutants from stormwater. However, turf grass, allowed to remain slightly high, can provide some benefits as well.

MAINTENANCE

Turf maintenance consists of mowing and removal of grass clippings. Swales should be cleaned of any sediment accumulation and monitored for erosion with subsequent reseeding or replanting as necessary. Fertilizers should be applied before the rainy season to minimize conveyance of pollutants to the stream.

PLANT SPECIES FOR VEGETATED BUFFERS AND SWALES

The following trees and shrubs tolerate wet soil and periodic inundation, and may be suitable for planting in basins and biofilters depending on regional hardiness and other factors. This list is not all-inclusive, and draws from both native and exotic species.

TREES

Box Elder (N)
Acer negundo

Red Maple (H)
Acer rubrum

Silver Maple (H)
Acer saccharinum

Alder (N)
Alnus spp.

Birch
Betula spp.

Pecan
Carya illinoensis

Buttonbush
Carya ovata

She-Oak
Casuarina spp.

Lily of the Valley
Clethra arborea

Redtwig Dogwood (N)
Cornus stolonifera

Persimmon
Diospyros virginiana

Oregon Ash (N)
Fraxinus latifolia

Honey Locust
Gleditsia triacanthos

Liquidambar
Liquidambar styrciflua

Tulip Tree
Liriodendron tulipifera

Southern Magnolia
Magnolia grandiflora

Sweet Bay
M. virginiana

Cajeput Tree
Melaleuca quinquenervia

Tupelo
Nyssa sylvatica

Sitka Spruce
Picea sitchensis

Sycamore (H)
Platanus occidentalis

California Sycamore (N)
P. racemosa

Fremont Cottonwood (N)
Populus fremontii

Wingnut
Pterocarya stenocarpus

Bur Oak (H)
Quercus macrocarpa

Pin Oak (H)
Q. palustris

Willow (N)
Salix spp.

Bald Cypress
Taxodium distichum

Arborvitae
Thuja occidentalis

SHRUBS

Salal (N)
Gaultheria shallon

Horsetail (N)
Equisetum hyemale

Fern (N)
Ferns (many spp.)

Iris (N)
Iris (many spp.)

Myoporum
Myoporum parvifolium 'putan creek'

Pacific Wax Flower (N)
Myrica

Willow (N)
Salix spp.

Huckleberry (N)
Vaccinium

GROUND COVER

Acorus
Acorus gramineus

Sedge (N)
Carex spp.

Tufted Hairgrass (N)
Deschampsia caespitosa

Sierra Laurel
Leucothoe davisiae

Bulrush
Scirpus spp.

Rush (N)
Juncus spp.

Spiderwort
Tradescantia Virginiana

Common Cattail (N)
Typha latifolia

SUITABLE TURF GRASS

Bentgrass (N)
Agrostis exerata

California Brome (N)
Bromus carinatus

Creeping wildrye (N)
Elymus triticoides

Idaho Fescue, (N) Blue Bunchgrass
Festuca idahoensis

Molate/Red Fescue (N)
Festuca rubra

Meadow Barley (N)
Hordeum brachyantherum

Meadow Barley salt (N)
Hordeum brachyantherum salt

Rushes (N)
Juncus spp.

N = Use plants grown from propagules collected locally

H = This species has a potential to hybridize with natives. Delete if native plants of the same genus exist nearby.

Table excerpted from BASMAA's Start at the Source Guide (2003) and adapted from Harris (1992), Sunset Western Garden Book (1998) and ABAG (1995b).

"Start at the Source" is available at http://www.scvurppp-w2k.com/basmaa_satsm.htm. Other design guidance for pollution prevention is available at www.scvurppp.org

SPECIFICATIONS FOR PLACEMENT OF STRUCTURAL FILL ON SCVWD LEVEES

INTRODUCTION

This specification for structural fill is to be used where fill is placed on a levee in conjunction with projects that construct levees, raise levee heights or include cuts into levees for placement of outfalls or utilities.

FILL MATERIAL

Fill material for trench backfill of levees and for levee embankment may be either imported backfill material or suitable material from trench excavation blended with imported earthfill material. The fill material is to be free of debris, organic or deleterious material and not contain rocks or lumps over 4 inches in greatest dimension; no more than 15% of the rocks or lumps should be larger than 2 ½ ". The fill material shall contain at least 75% finer than the #4 U.S. Standard Sieve and 50% finer than the #200 Sieve. The liquid limit shall be less than 40 and the plasticity index shall be between 10 and 20. Levee fill material should be relatively impervious (permeability less than 10 to the minus 6cm/sec).

ADDITIONAL GUIDELINES

Surfaces exposed by stripping or excavation shall be scarified to a minimum depth of 6 inches and compacted to a relative compaction of not less than 95% based on (American Society of Testing Materials) ASTM D 1557 standard. The loose thickness of each layer of embankment material before compaction shall not exceed 8 inches, and each lift shall be compacted to at least 90% relative compaction based on ASTM D1557 standard. The field density and moisture content of compacted fill will be determined according to ASTM D 1556, D2922 and D3017 standard procedures. Any backfilled area not meeting the minimum test requirements shall be removed and recompacted until tests meet the minimum requirements. Jetting or ponding is not permitted

No thin, sliver fills will be accepted. Where compacted channel embankment is required or where replacement in over excavated areas must be accomplished, the new embankment must be placed in thin, maximum 8 inch thick horizontal layers with a minimum width of 6 feet. This specified width may be any combination of new fill plus cut into existing slope, except that a minimum cut of 2 feet into existing slope per layer of fill must be made. Slopes shall be trimmed to conform to existing section after placement of fill has been completed.

OUTFALL STANDARDS

INTRODUCTION

The details in this Design Guide are intended to provide clarification to G&S IV.B.1-3, which calls for slope protection for outfalls to be designed to meet SCVWD minimum engineering standards using softer slope protection methods wherever possible. This Design Guide also includes a plan view to show how the outfall would intersect with a natural channel so as to not impede surface flows or create a barrier to fish passage. The diagrams depicted are models and should be used by the local permitting agency staff unless otherwise determined by agreement between the agency and SCVWD or unless stream conditions dictate otherwise. For placement of outfalls into streams with levees, floodwalls or structural linings, however, SCVWD will need to be consulted as they typically have ownership or easements on these areas of the stream.

GENERAL GUIDELINES

1. Outfalls should not overhang the streambank or streambed as this can lead to excessive channel erosion.
2. Outfalls, bridge abutments and other structures should be placed within the first half of the straight section after the bend (page 4.24) in order to minimize erosion, prevent turbulence and prevent redirection of flow.
3. Outfalls should be aligned downstream in the direction of the flow, at an angle no greater than 30 degrees. **In natural streams where possible, a narrow channel should be created** for the outfall so that the discharge merges into the streams in order to minimize erosion, prevent turbulence and prevent redirection of flow.
4. Any outfall pipe should be cut off flush with the face of slope protection.
5. Outfalls with flap gates require dormers or similar designs to isolate the flap gate and keep them out of flow area. (See Detail #18/1 and 28/1).

TYPICAL MATERIALS TO USE

Where the pipe must be cut flush with the side slope (typically in engineering channels and on steep slopes where hard slope protection measures are needed, use corrugated metal or appropriate plastic pipes for outfalls. For outfalls, with rock slope protection, or where pipe is constructed into a concrete headwall, reinforced concrete pipe may be used.

TYPES OF OUTFALLS AND WHEN TO USE THEM

The selection of an outfall is dependent on the condition of the stream bank into which the outfall is directed. Below is a table that describes when certain outfalls would be most appropriate.

In addition to these measures, SCVWD has also developed model details for outfalls into mattress and stepped gabions, an emergency overflow into a stream, and an outfall into a deep ravine. These will be available on the District's web site. Other soft methods of slope protection that incorporate vegetation are shown in the Bank Protection section. An outfall may also be incorporated into a vegetated bank design provided there is sufficient slope protection to prevent bank erosion.

Type of Outfall	Detail Number	When to Use	Benefits/Limitations
Outfalls with rock slope protection	6-1, 6-2, 6-3	For unlined streams where slopes are flatter than 1.5:1 and where an incision into the bank is not possible.	Preferred option because vegetation can be re-established and rocks are more resilient to movement and stream degradation.
Outfall with a drainage swale	27-1	For natural streams where a bank incision can be made	Reduced potential for erosion from outfall but an incorrect placement in channel can increase turbulence and erosion
Outfall into RCB Wall with one or two steel curtains	1-1,1-2,1-3 2-1, 2-2	If the stream is contained in a Reinforced Concrete Box. The detail used will depend on the steel rebar configuration in the box	Reduced need for additional bank protection. Size of pipe is limited: larger pipes can impact hydraulics.
Pipe to Pipe Outfall	3-1	If the stream is contained in a reinforced Concrete or corrugated metal pipe	Outfall pipe is limited to ¼ the size of the stream pipe
Pipe Outfall into Channel Lining	4-1, 4-2	If the stream is contained in a concrete lined channel	
Pipe Outfall with Sacked Concrete Rip Rap	5-1, 5-2, 5-3, 5-4, 5-5, 5-6	For steep slopes 1.25:1 or greater where other measures will not be structurally sound	This treatment is not preferred ite it deflects flow, is not resilient in degrading channel

OUTFALL STANDARDS

Outfalls, bridge abutments and other structures should be placed within the first half of the straight section after the bend.

Outfalls should be aligned downstream in the direction of the flow, at an angleof less than 30 degrees.

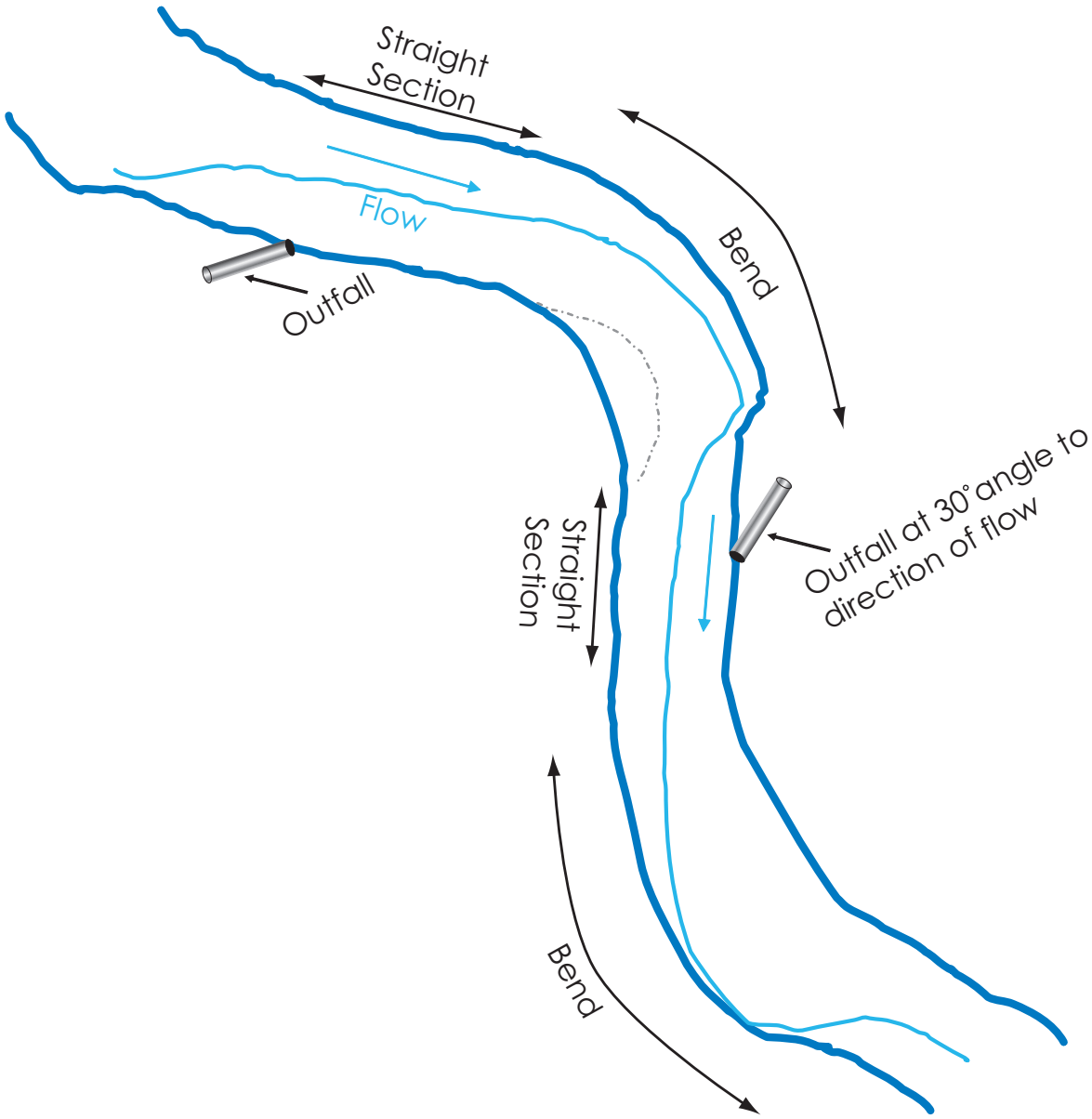

OUTFALL WITH ROCK SLOPE PROTECTION

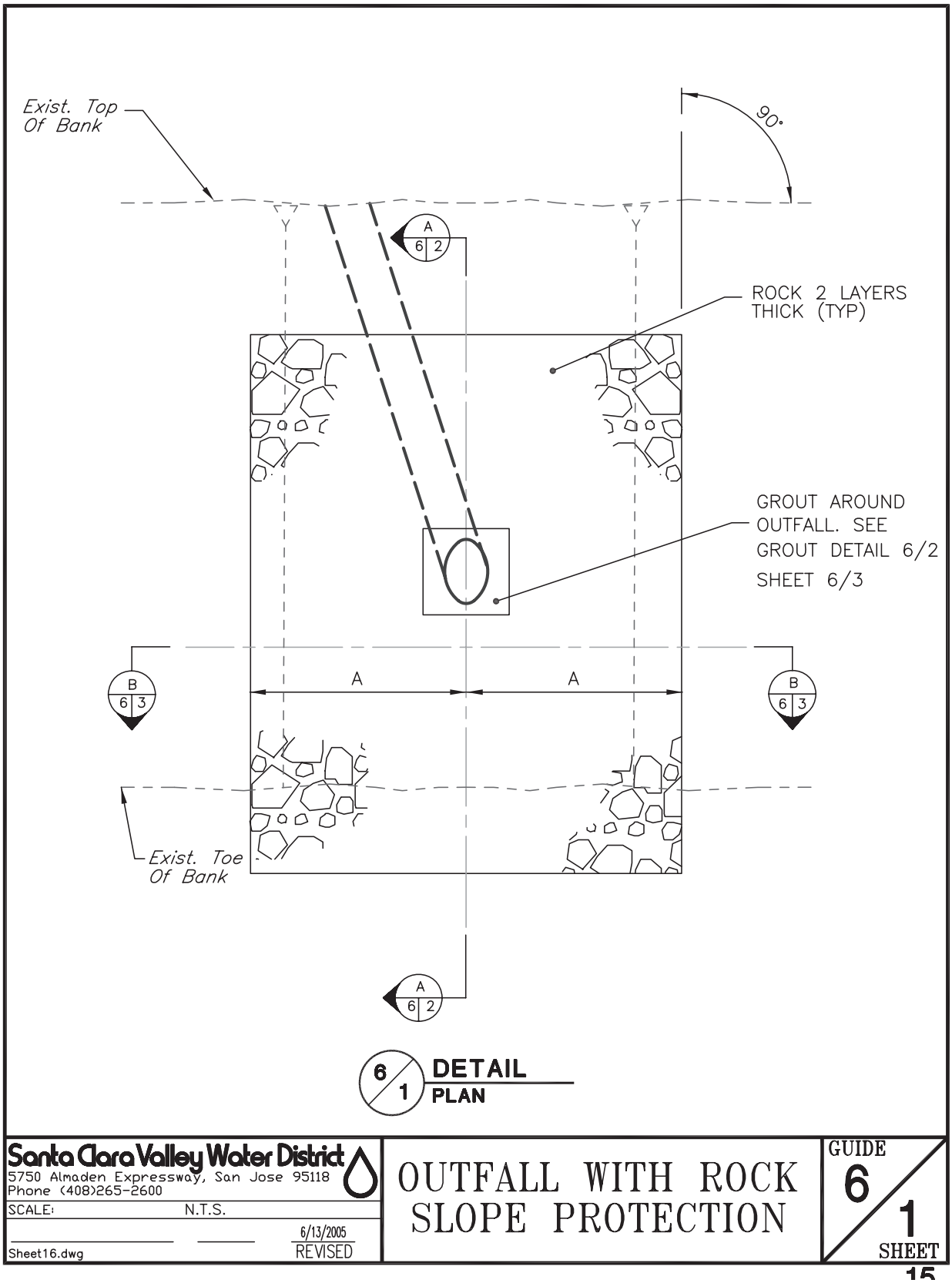

OUTFALL WITH ROCK SLOPE PROTECTION

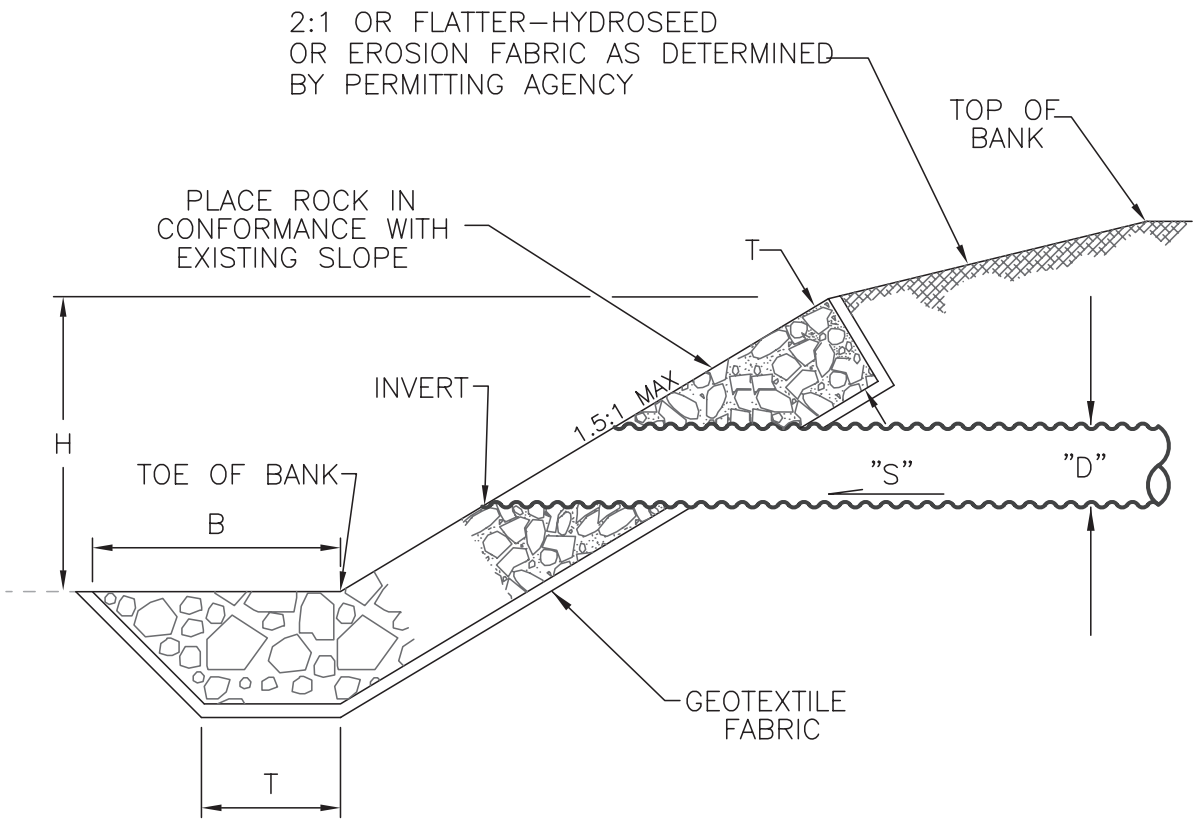

A 6 2 SECTION

NOTE: Refer to notes on following page 4–28 for identification of lettered dimensions.

Santa Clara Valley Water District 5750 Almaden Expressway, San Jose 95118 Phone (408)265-2600 SCALE: N.T.S. Sheet17.dwg 6/13/2005 REVISED	OUTFALL WITH ROCK SLOPE PROTECTION	GUIDE 6 / 2 SHEET 16

OUTFALL WITH ROCK SLOPE PROTECTION

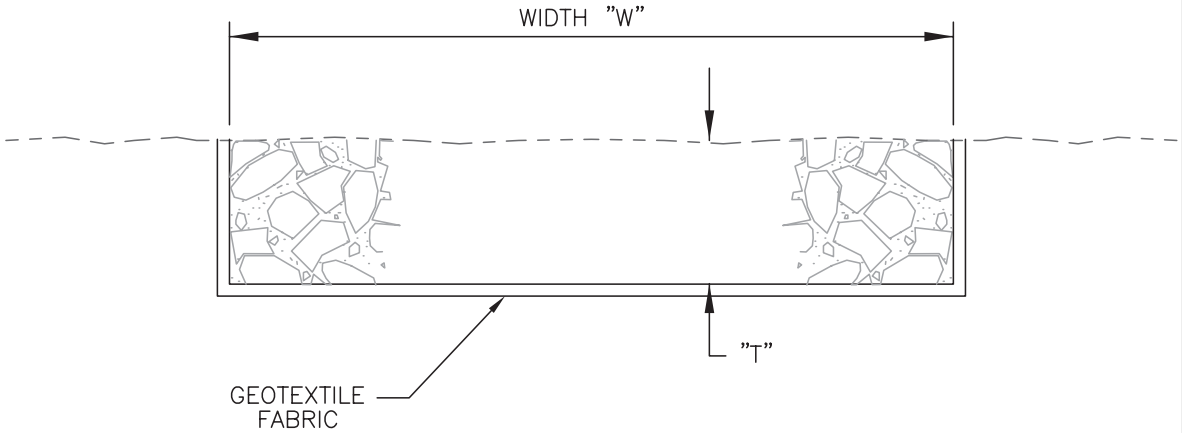

B 6/3 SECTION

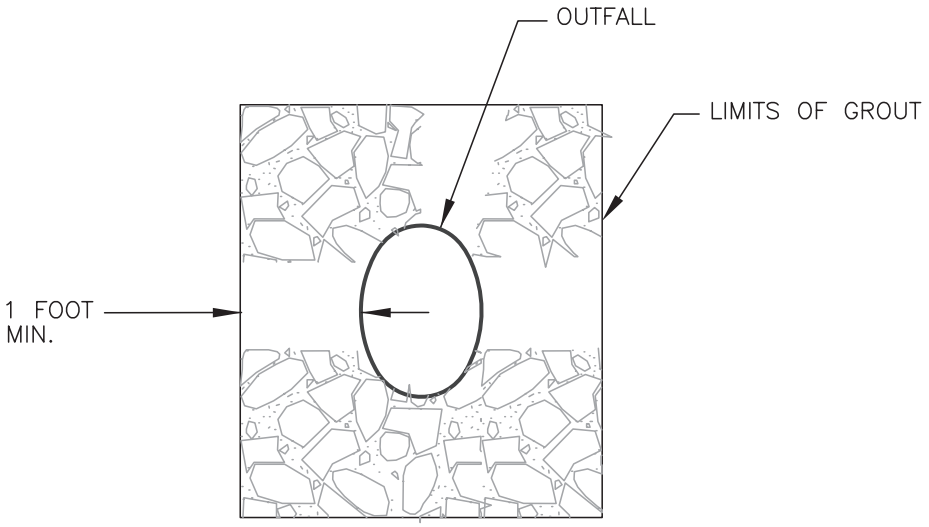

6/2 DETAIL GROUT

Santa Clara Valley Water District
5750 Almaden Expressway, San Jose 95118
Phone (408)265-2600

SCALE: N.T.S.

9/4/2001
REVISED

OUTFALL WITH ROCK SLOPE PROTECTION

GUIDE 6 / 3 SHEET

CadPrinter(HP-IV)

W:\cpru\dwg\details\scvwd_det\Sheet18.dwg

17

NOTES FOR CONSTRUCTION OF OUTFALL

1. IT IS MANDATORY THAT THE SCVWD INSPECTOR BE NOTIFIED AT LEAST 48 HOURS PRIOR TO THE COMMENCEMENT OF CONSTRUCTION. COMPLETE REMOVAL OF PORTIONS OF THE WORK INSTALLED WITHOUT INSPECTION MAY BE REQUIRED IF THIS REQUIREMENT IS NOT MET.

2. ALL WORK IS TO BE IN ACCORDANCE WITH THE STATE STANDARD SPECIFICATIONS SECTION 72–2. NO WHITE ROCK MAY BE USED. METHOD B PLACEMENT SHALL BE USED. GROUT TO BE IN CONFORMANCE WITH PARAGRAPH 65–1.06 FOR CEMENT MORTAR.

3. THE OUTFALL PIPE IS TO BE CUT OFF FLUSH WITH THE SLOPE PROTECTION.

4. ANY BACKFILL NECESSARY FOR THE INSTALLATION OF THE OUTFALL SHOULD BE COMPACTED TO 90 PERCENT RELATIVE COMPACTION IN CONFORMANCE WITH ASTM STANDARD TEST METHOD D1557.

5. ANY EXCESS SOIL FROM EXCAVATION SHALL BE DEPOSITED OFF OF DISTRICT RIGHT OF WAY UNLESS APPROVED BY THE DISTRICT'S INSPECTOR.

CRITERIA TO BE USED FOR DESIGN OF OUTFALL

1. ROCK SLOPE PROTECTION FOR OUTFALLS MAY NOT BE USED FOR SLOPES STEEPER THAN 1.5:1.

2. THE PLAN VIEW, SECTION A 6/2 AND SECTION B 6/3 ARE TO BE DRAWN TO SCALE ON THE PLANS WITH SCALE PROVIDED AND SHOULD REFLECT EXISTING CONFIGURATION OF THE CHANNEL WHERE THE OUTFALL IS PROPOSED.

3. PLANS SHOULD SPECIFY THE FOLLOWING DIMENSIONS/ELEVATIONS:

PIPE DIAMETER "D"	TOP OF BANK ELEVATION
1/2 SLOPE PROTECTION WIDTH "A"	TOE OF BANK ELEVATION
ROCK THICKNESS "T"	PIPE INVERT ELEVATION
CHANNEL BOTTOM ROCK WIDTH "B"	PIPE OUTFALL SLOPE "S"
SLOPE PROTECTION WIDTH "W"	
HEIGHT OF ROCK "H"	

4. ROCK THICKNESS "T", HEIGHT OF ROCK PROTECTION "H" AND ROCK CLASS (gradation) ARE TO BE DETERMINED BY SCVWD BASED ON LOCATION OF OUTFALL AND FIELD CONDITIONS. ONE–HALF SLOPE PROTECTION WIDTH "A" IS TO BE THE GREATER OF TWICE THE PIPE DIAMETER "D" OR 2 FEET. CHANNEL BOTTOM ROCK WIDTH "B" IS TO BE 2 TIMES THE ROCK THICKNESS "T".

5. THE OUTFALL PIPE IS TO HAVE THE FOLLOWING CHARACTERISTICS:

MATERIAL:	CORRUGATED METAL PIPE
DIAMETER:	12–INCH MINIMUM
THICKNESS AND SLOPE:	SEE TABLE 5/1 ON SHEET 5/3

REINFORCED CONCRETE PIPE MAY BE USED IN ROCK SLOPE PROTECTION.

6. GEOTEXTILE FABRIC SHALL BE MIRAFI 700X OR EQUAL.

7. ROCK SLOPE PROTECTION MAY BE COVERED WITH SOIL AND PLANTED.

8. THE OUTFALL PIPE SHOULD POINT DOWNSTREAM.

OUTFALL WITH DRAINAGE SWALE

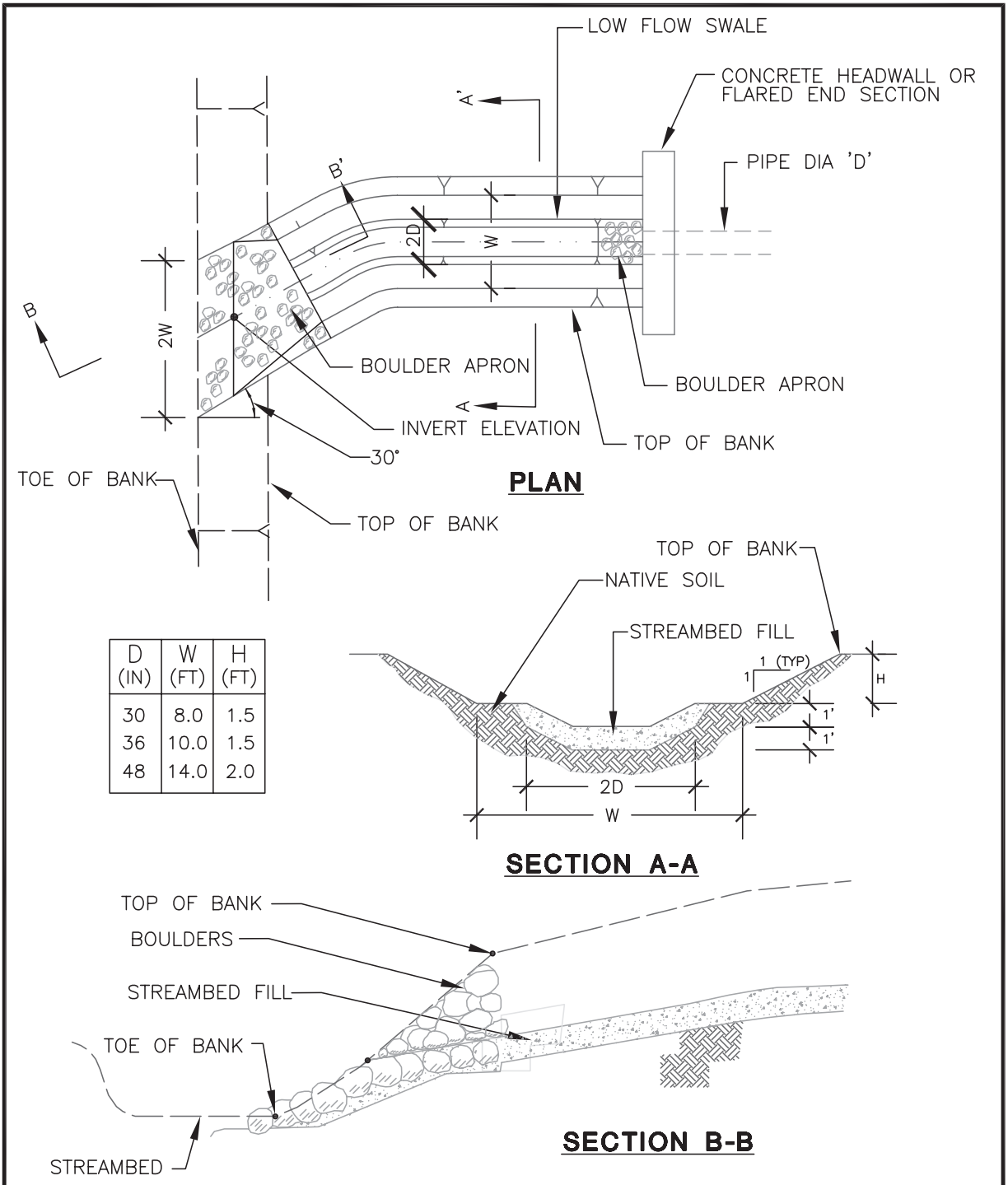

D (IN)	W (FT)	H (FT)
30	8.0	1.5
36	10.0	1.5
48	14.0	2.0

Santa Clara Valley Water District
5750 Almaden Expressway, San Jose 95118
Phone (408)265-2600

SCALE: N.T.S.

6/30/2005
REVISED

OUTFALL WITH DRAINAGE SWALE

GUIDE 27
1
SHEET 53

W:\cpru\dwg\details\scvwd_det\Sheet60.dwg

TYPICAL OUTFALL INTO REINFORCED CONCRETE BOX WALL

with two steel curtains

NOTES

1. 2–inch clear typical for all steel.
2. Cut CMP flush with water face.
3. Show actual dimensions.
4. "T" = Thickness of existing culvert wall.

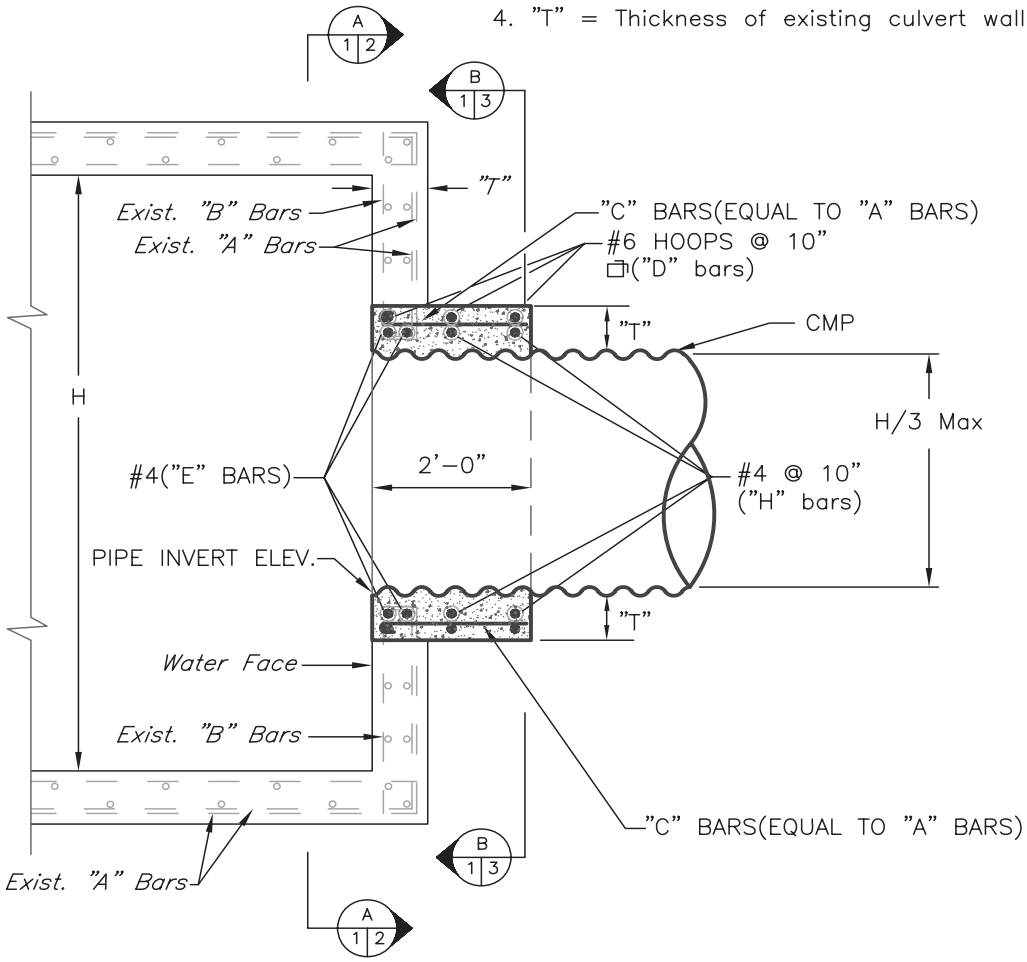

1/1 **DETAIL**
OUTFALL INVERT ABOVE INVERT OF EXISTING STRUCTURE

LEGEND

- ∘ *Exist. Reinforcing*
- • ADDITIONAL REINFORCING (TWO STEEL CURTAINS)

Santa Clara Valley Water District 5750 Almaden Expressway, San Jose 95118 Phone (408)265-2600 SCALE: 1/2" = 1'–0" 9/4/2001 REVISED	TYPICAL OUTFALL INTO RCB WALL WITH TWO STEEL CURTAINS	GUIDE 1 / 1 SHEET 1

CadPrinter(HP-IV)
W:\cpru\dwg\details\scvwd_det\Sheet1.dwg

TYPICAL OUTFALL INTO REINFORCED CONCRETE BOX WALL

with two steel curtains

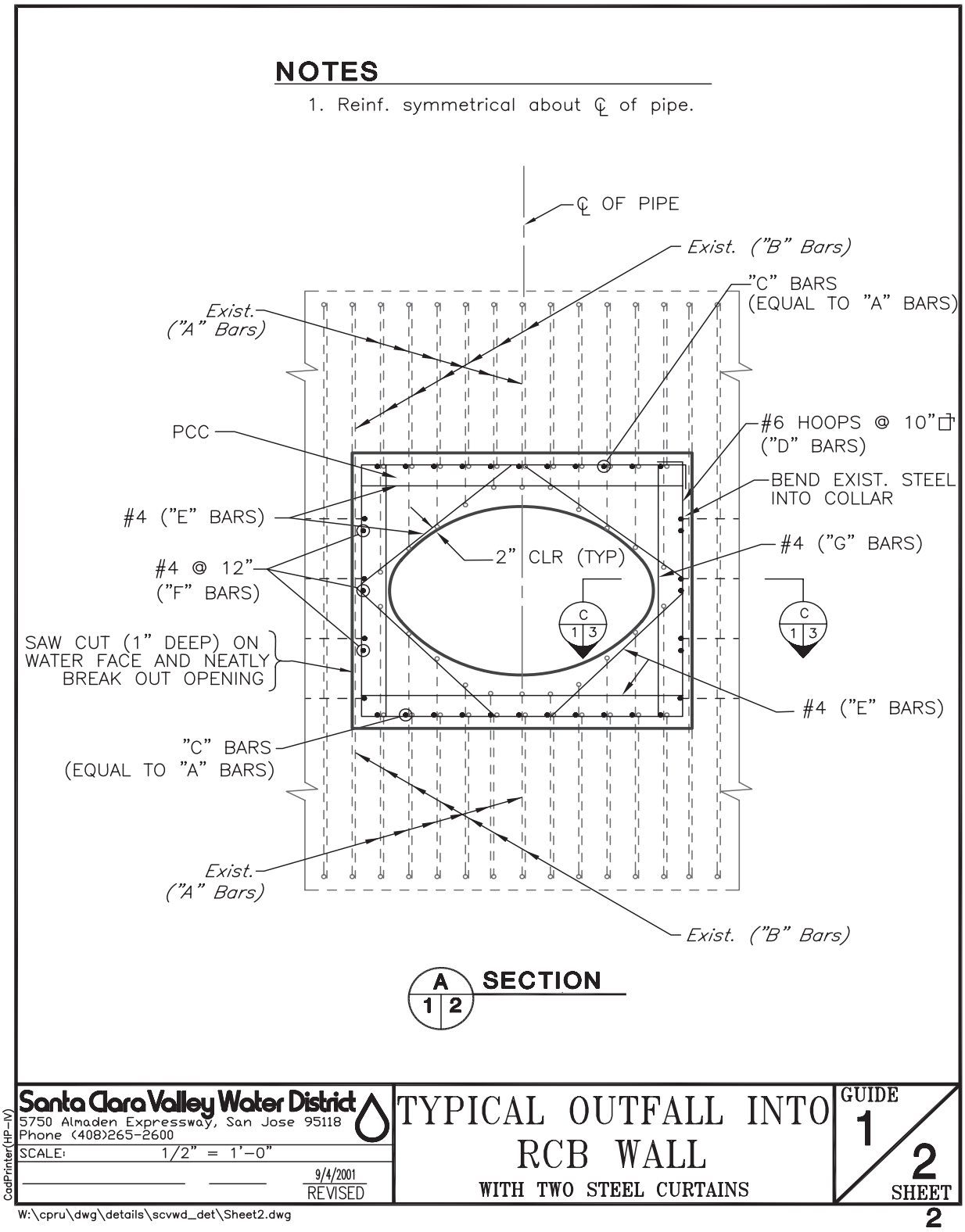

TYPICAL OUTFALL INTO REINFORCED CONCRETE BOX WALL

with two steel curtains

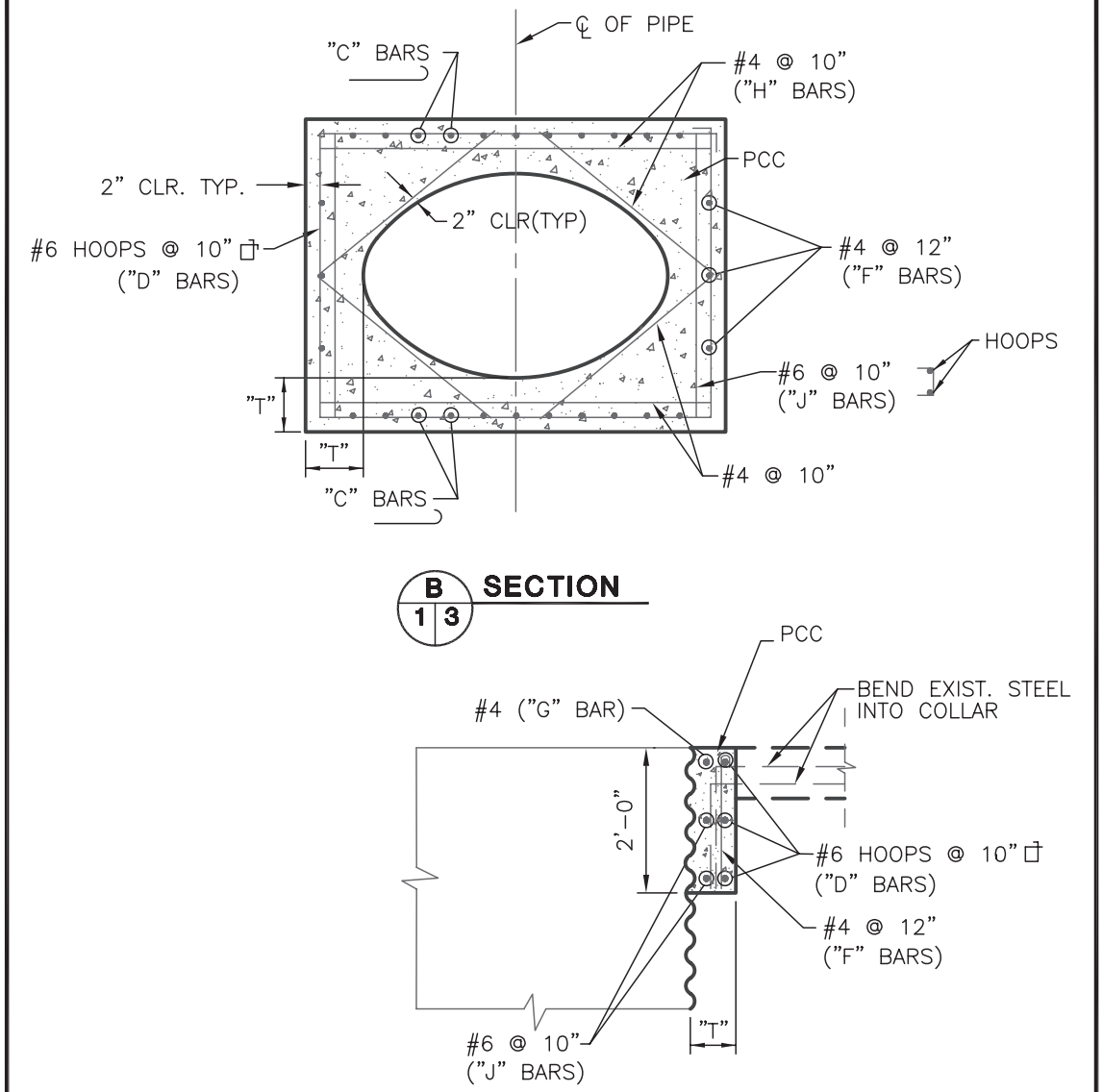

NOTES

1. Reinf. symmetrical about ℄ of pipe and parallel with culvert.
1. T= Thickness of exist culvert wall

Santa Clara Valley Water District
5750 Almaden Expressway, San Jose 95118
Phone (408)265-2600

SCALE: 1/2" = 1'-0"

9/4/2001
REVISED

TYPICAL OUTFALL INTO RCB WALL
WITH TWO STEEL CURTAINS

GUIDE 1 / 3
SHEET 3

CadPrinter(HP-IV)

W:\cpru\dwg\details\scvwd_det\Sheet3.dwg

TYPICAL OUTFALL INTO REINFORCED CONCRETE BOX WALL

with one steel curtains

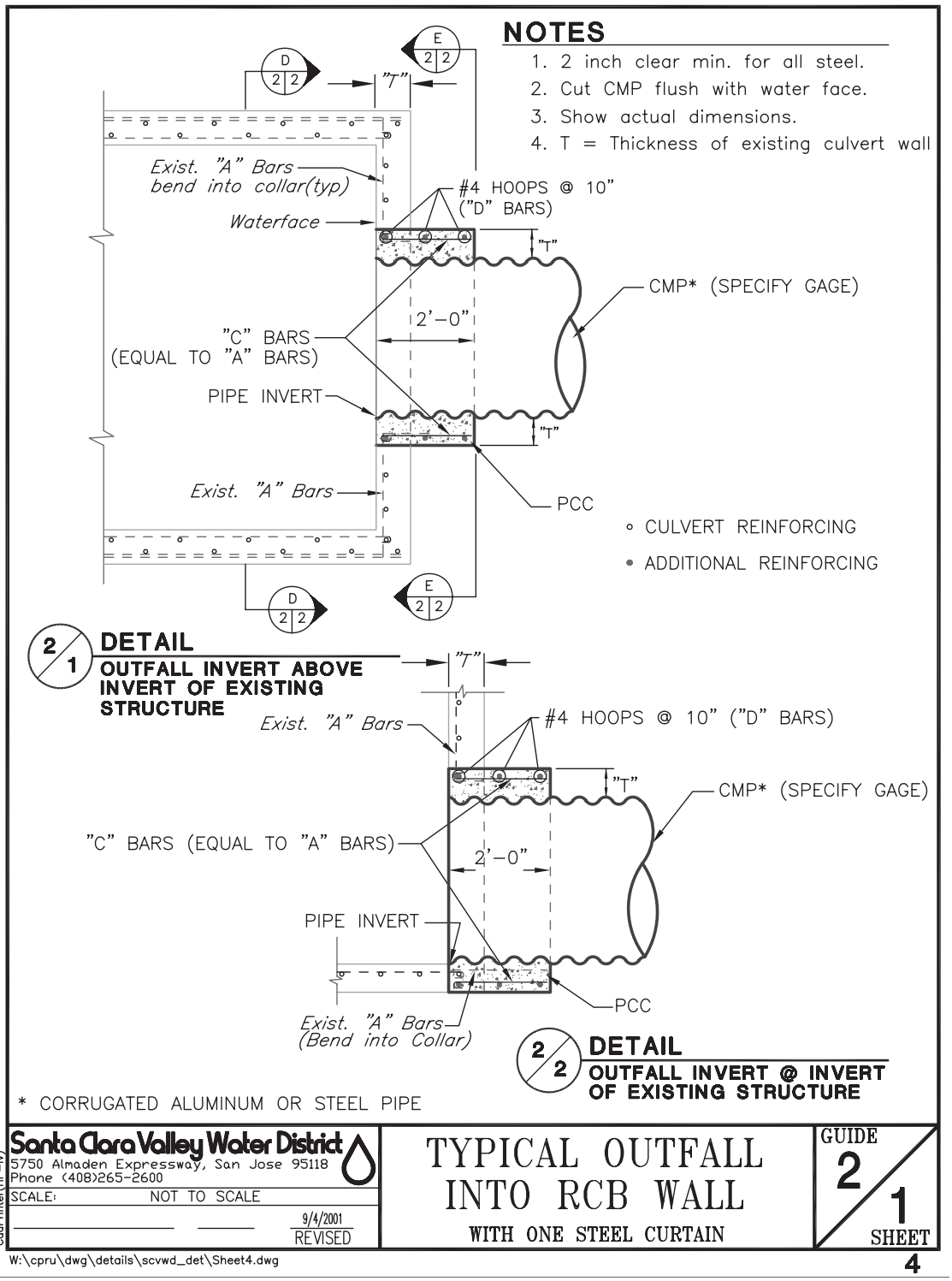

TYPICAL OUTFALL INTO REINFORCED CONCRETE BOX WALL

with one steel curtain

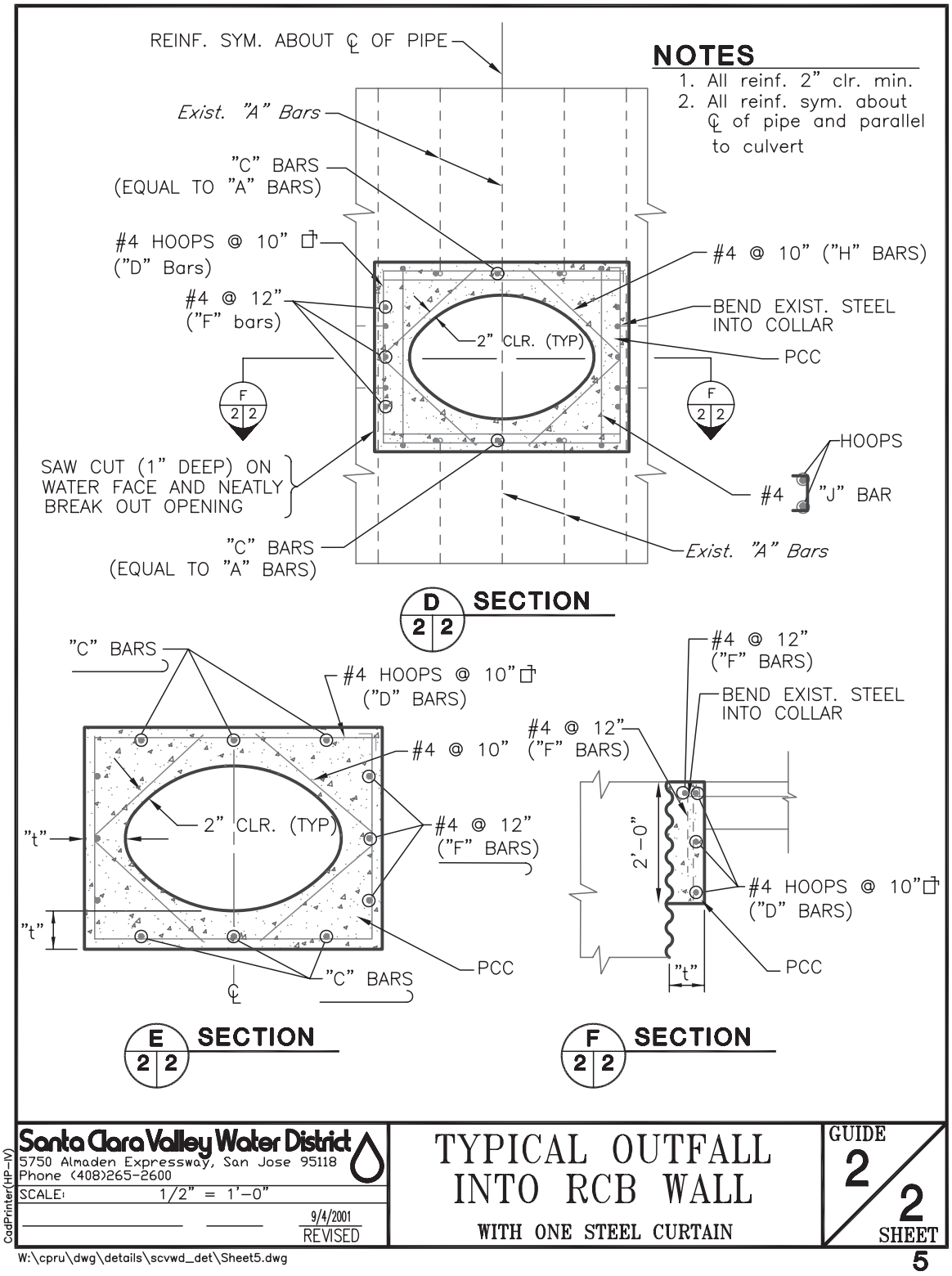

PIPE TO PIPE OUTFALLS

The size of the pipe is limited to 1/4 the diameter of the receiving pipe.

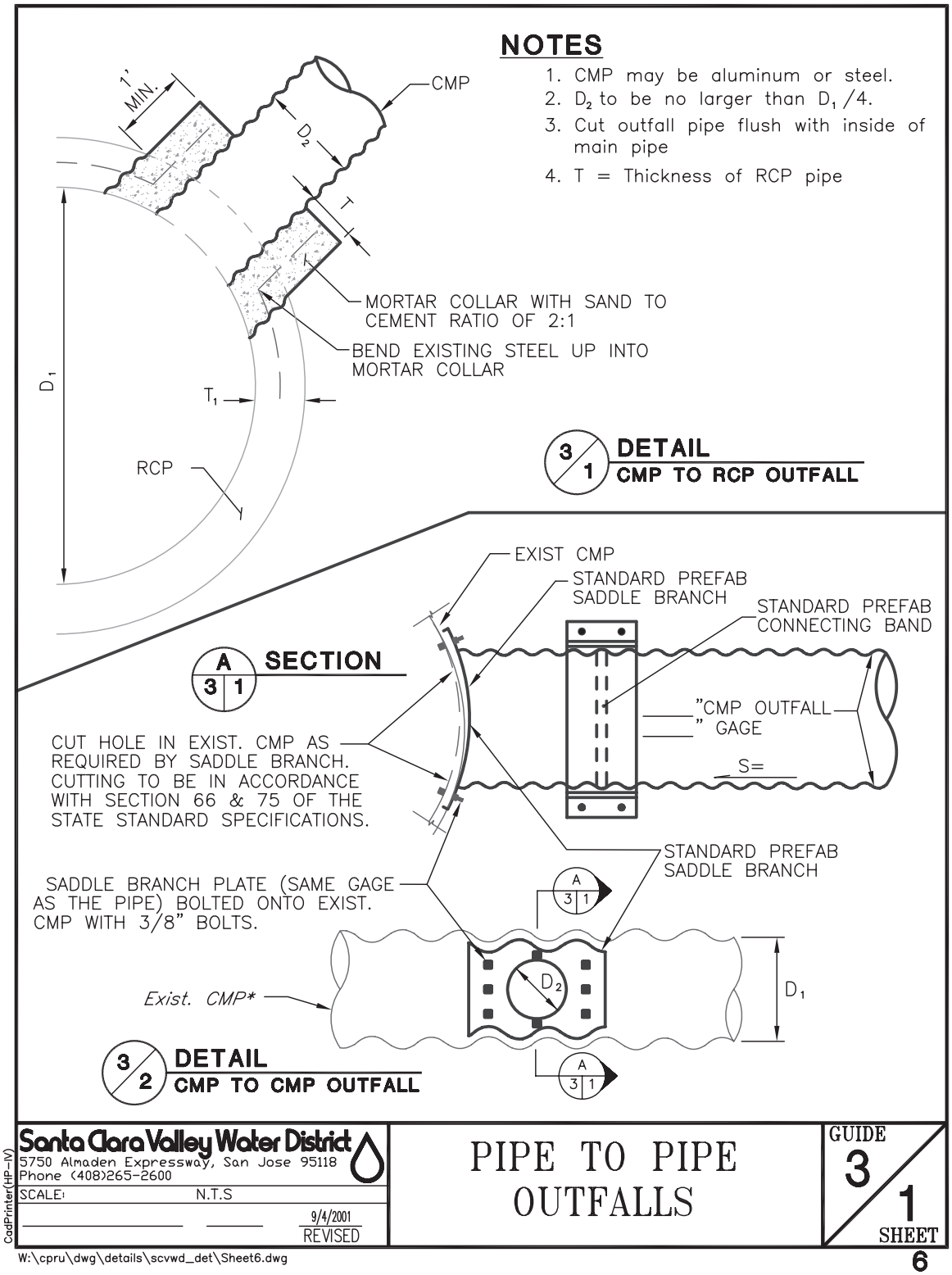

PIPE OUTFALL INTO CHANNEL LINING

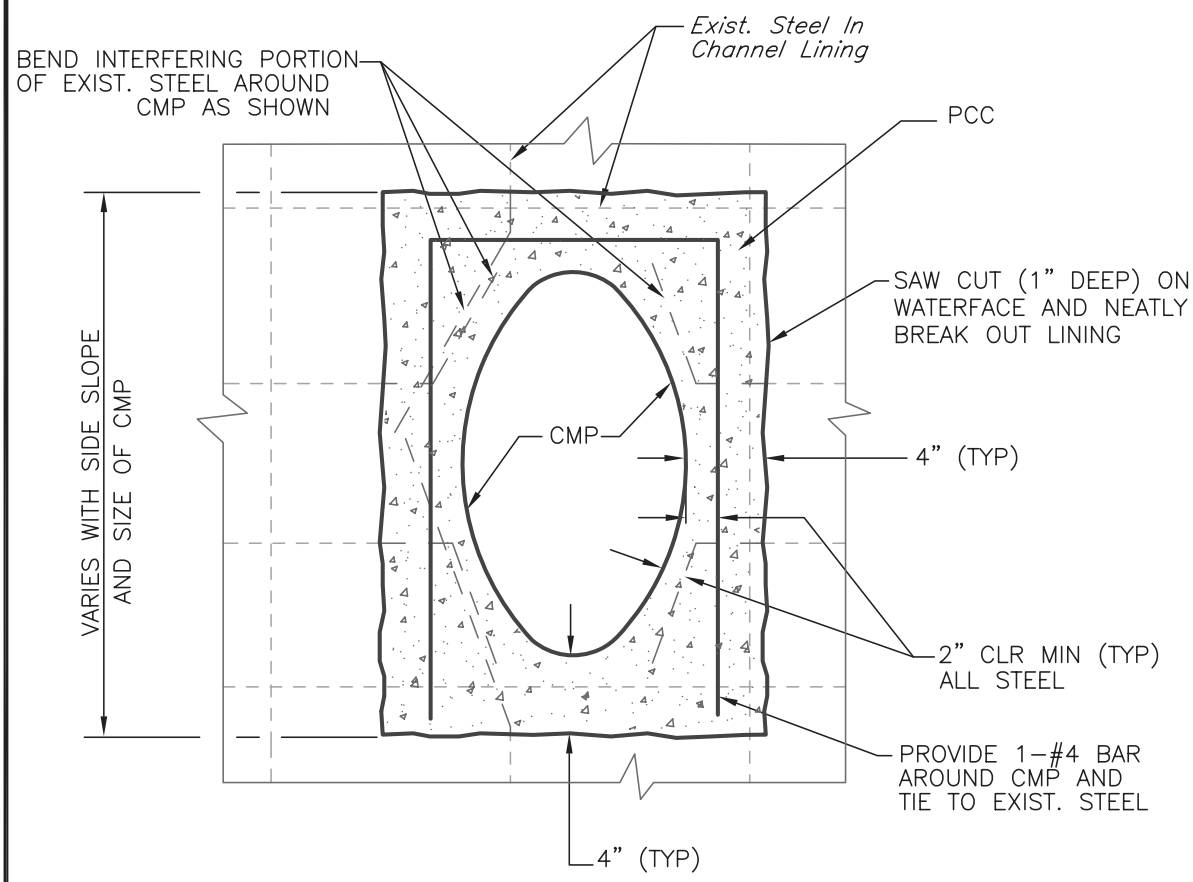

4/1 **DETAIL**
CHANNEL SIDESLOPE 1:1 OR FLATTER

NOTES

1. Cut CMP flush with water face of lining.
2. CMP may be aluminum or steel.
3. This Detail is typical for both curtains of exist. steel.

Santa Clara Valley Water District
5750 Almaden Expressway, San Jose 95118
Phone (408)265-2600

SCALE: N.T.S

9/4/2001
REVISED

PIPE OUTFALL INTO CHANNEL LINING

GUIDE 4 / 1 SHEET 7

CadPrinter(HP-IV)

W:\cpru\dwg\details\scvwd_det\Sheet7.dwg

PIPE OUTFALL WITH SACKED CONCRETE RIP RAP

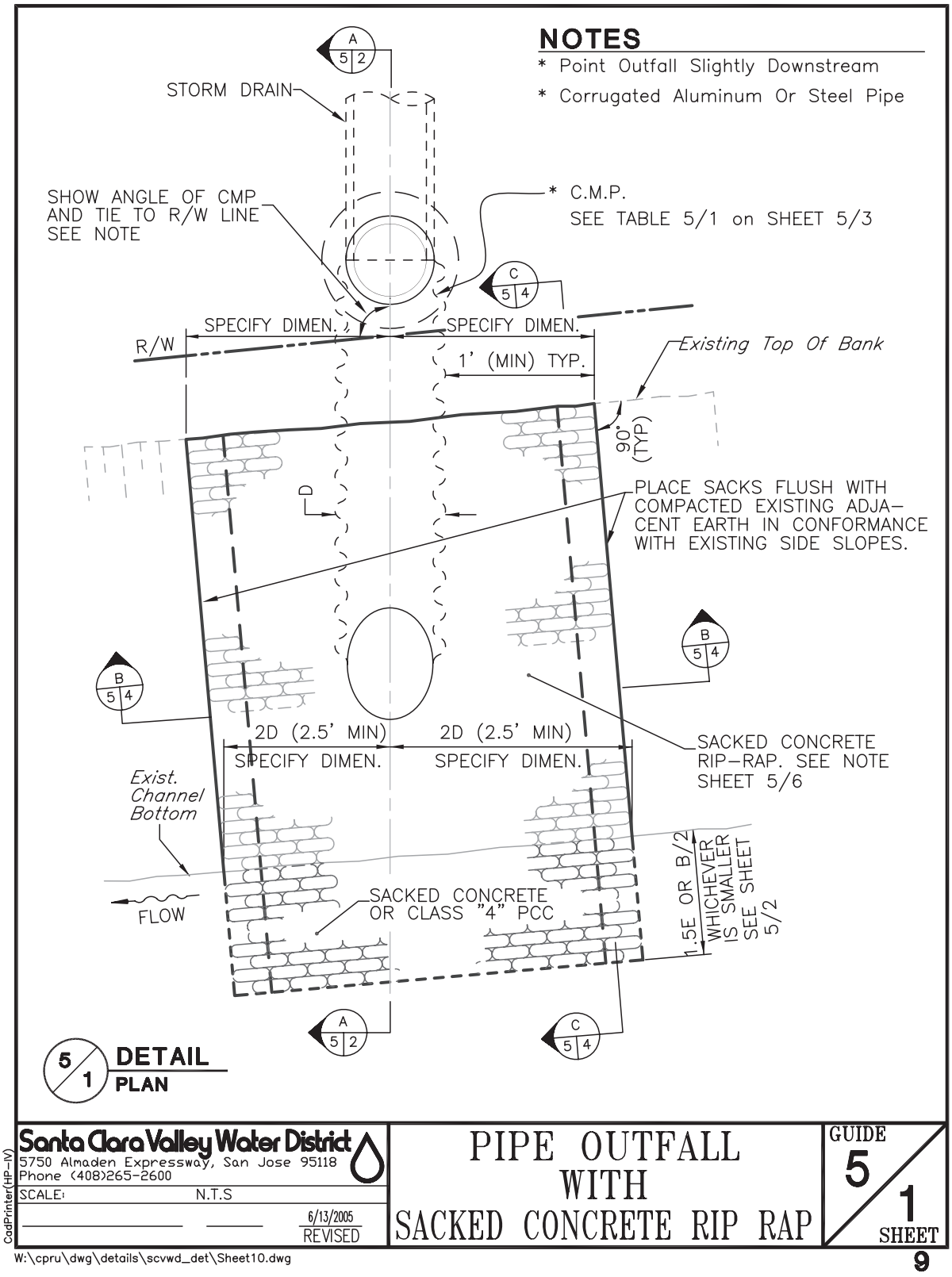

PIPE OUTFALL WITH SACKED CONCRETE RIP RAP

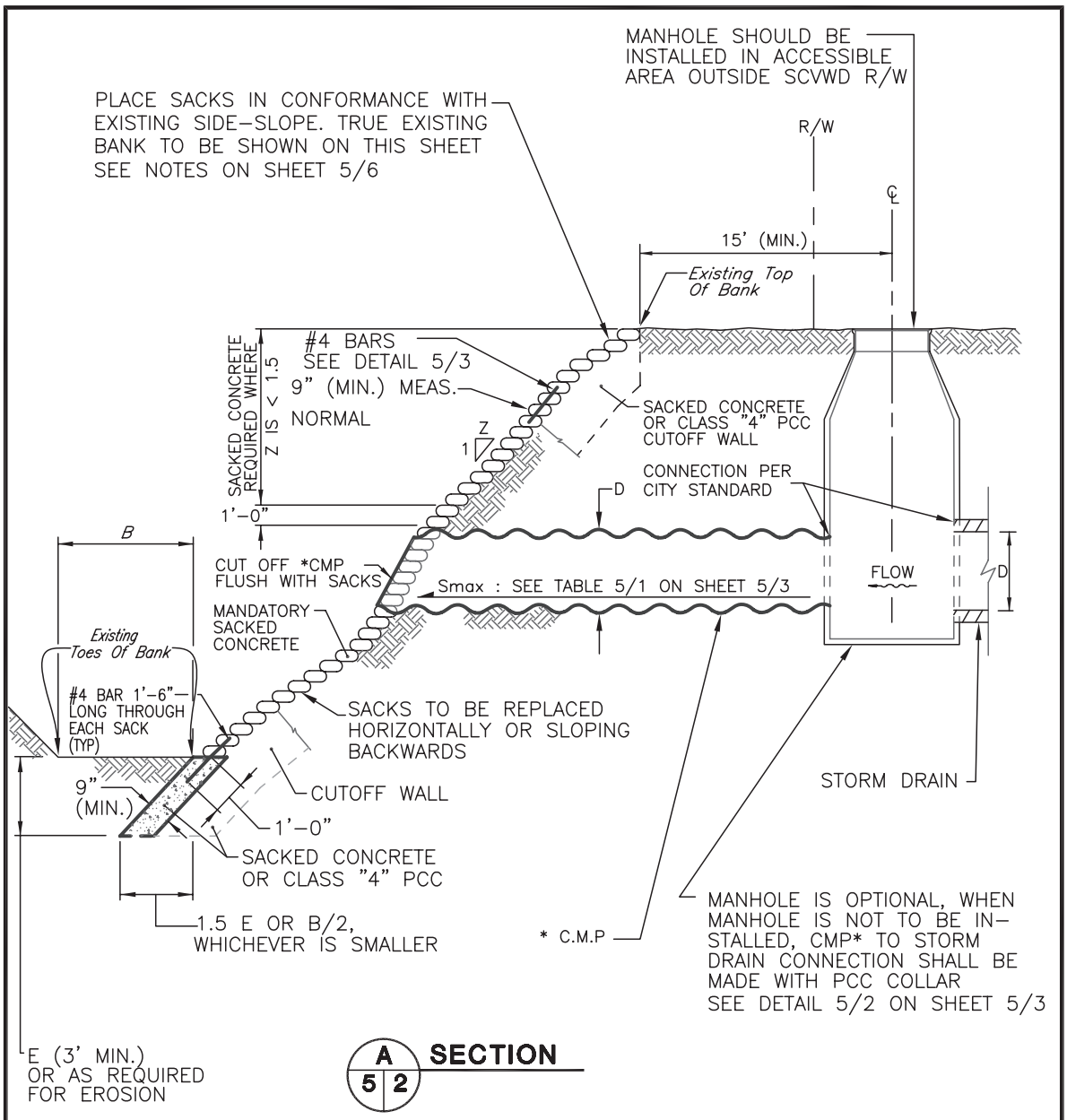

NOTES:

Place outfall invert 2-feet above stream bottom in locations where there is sediment deposition

* Corrugated Aluminum Or Steel Pipe

Santa Clara Valley Water District 5750 Almaden Expressway, San Jose 95118 Phone (408)265-2600 SCALE: N.T.S Sheet11.dwg 6/13/2005 REVISED	PIPE OUTFALL WITH SACKED CONCRETE RIP RAP	GUIDE 5 / SHEET 2

10

PIPE OUTFALL WITH SACKED CONCRETE RIP RAP

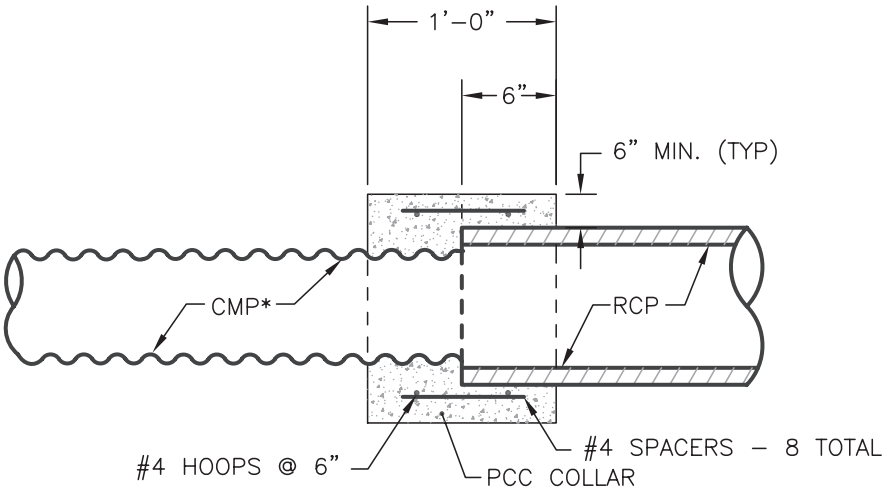

5/2 DETAIL
PCC COLLAR

* CORRUGATED ALUMINUM OR STEEL PIPE

CMP	GAGE	Smax.*
12"	16	.0778
18"	16	.0659
24"	14	.0580
30"	14	.0530
36"	12	.0491

CMP	GAGE	Smax.*
42"	12	.0459
48"	12	.0432
54"	12	.0411
60"	10	.0394
66"	10	.0379

CMP	GAGE	Smax.*
72"	10	.0365
78"	8	.0354
84"	8	.0343

$$Smax = \frac{112\ n^2}{D^{1/3}}$$ (MEASURED. IN FT.)

5/1 TABLE

REQUIRED PIPE GAGE AND MAXIMUM ALLOWABLE SLOPES * FOR CMP OUTFALLS

* THE ABOVE SLOPES ARE BASED ON CMP WITH STANDARD CORRUGATIONS.

Santa Clara Valley Water District
5750 Almaden Expressway, San Jose 95118
Phone (408)265-2600

SCALE: N.T.S

9/4/2001
REVISED

PIPE OUTFALL WITH SACKED CONCRETE RIP RAP

GUIDE 5 / SHEET 3

CadPrinter(HP-IV)

W:\cpru\dwg\details\scvwd_det\Sheet12.dwg

11

PIPE OUTFALL WITH SACKED CONCRETE RIP RAP

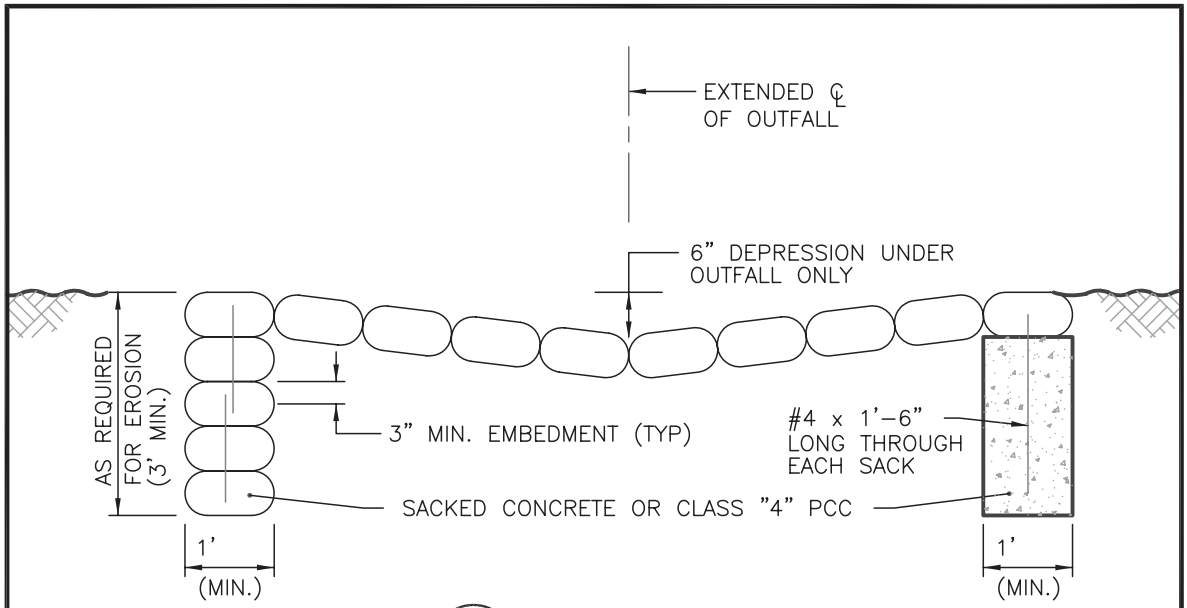

B 5 4 SECTION
DEPRESSED OUTFALL

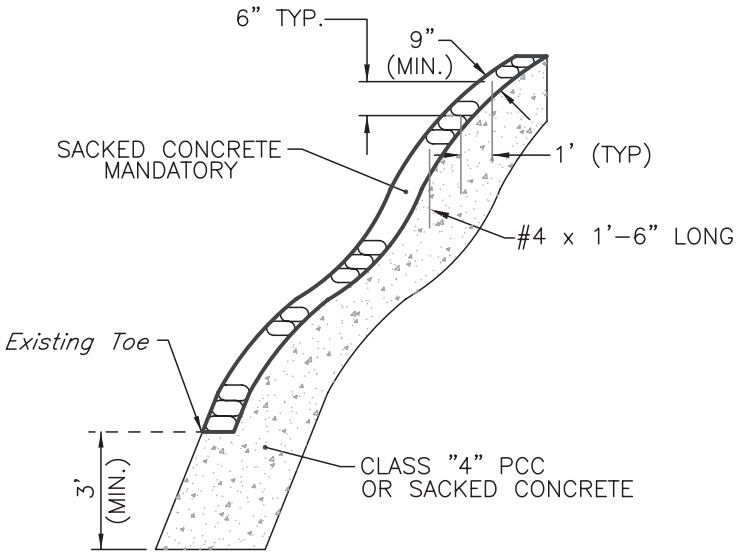

C 5 4 SECTION
CLASS "C" PCC OUTFALL

Santa Clara Valley Water District
5750 Almaden Expressway, San Jose 95118
Phone (408)265-2600

SCALE: N.T.S

9/4/2001 REVISED

PIPE OUTFALL WITH SACKED CONCRETE RIP RAP

GUIDE 5 / 4 SHEET 12

CadPrinter(HP-IV)

W:\cpru\dwg\details\scvwd_det\Sheet13.dwg

PIPE OUTFALL WITH SACKED CONCRETE RIP RAP

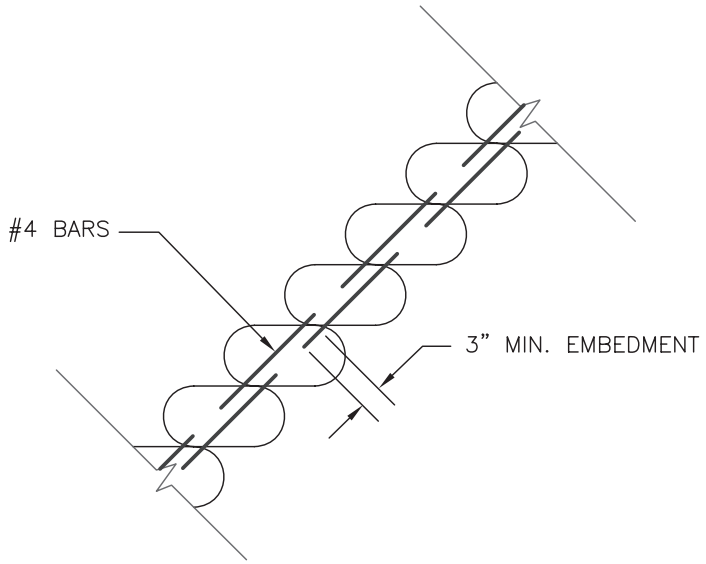

5/3 **DETAIL**
SACK REINFORCING

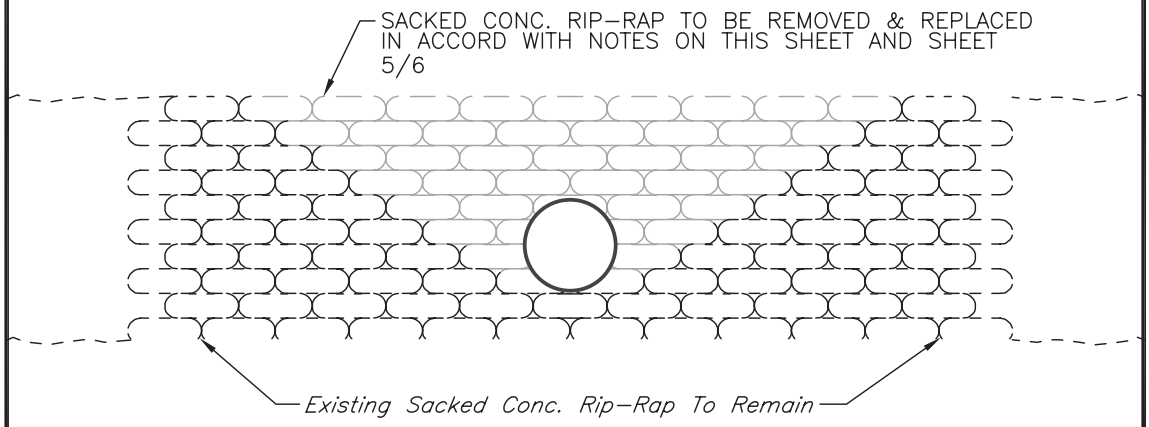

5/4 **DETAIL**
PIPE INSTALLATION IN EXIST. SACKED CONCRETE RIP-RAP

NOTES

1. The removal of only a portion of a sack is not allowed.

Santa Clara Valley Water District
5750 Almaden Expressway, San Jose 95118
Phone (408)265-2600

SCALE: N.T.S

9/4/2001
REVISED

Sheet14.dwg

PIPE OUTFALL WITH SACKED CONCRETE RIP-RAP

GUIDE 5 / 5 SHEET

13

PIPE OUTFALL WITH SACKED CONCRETE RIP RAP

NOTES FOR SACKED CONCRETE RIP-RAP

THESE NOTES ARE TO APPEAR ON PLANS

1. SACKS FOR SLOPE PROTECTION SHALL BE 10oz. BURLAP MEASURING 19 1/2" BY 36" INSIDE THE SEAMS WHEN LAID FLAT. CONCRETE SHALL BE CLASS 4 IN ACCORDANCE WITH THE CURRENT STATE STANDARD SPECIFICATION. THE AMOUNT OF WATER ADDED AT THE TIME OF MIXING SHALL BE SUCH TO PRODUCE A MIXTURE WITH A MAXIMUM SLUMP OF 4 INCHES. SACKED DRY MIXES ARE NOT PERMITTED. THE VOLUME OF CONCRETE PLACED IN EACH SACK IS TO BE CONTROLLED BY A CHUTE MEASURING DEVICE AND SHALL BE APPROXIMATELY 1/2 CUBIC FOOT OF PLASTIC CONCRETE LOOSELY PLACED SO AS TO LEAVE ROOM FOR FOLDING AT THE TOP.
2. FACE OF RIPRAP TO BE COINCIDENT WITH EXISTING SIDE SLOPE OF CHANNEL. DO NOT PACK UNTIL SMOOTH; LEAVE AS ROUGH AS POSSIBLE.
3. EXTEND RIPRAP UP TO THE TOP OF BANK, UNLESS OTHERWISE SPECIFIED ON PLAN.
4. INSTALL CUTOFF WALL (3-FOOT MINIMUM DEPTH) AT UPSTREAM AND DOWNSTREAM ENDS. CUTOFF WALLS TO EXTEND UP SIDES OF CHANNEL.
5. DRIVE ONE #4 REINFORCING BAR THROUGH EACH SACK. MINIMUM LENGTH OF BARS TO BE 18 INCHES. DO NOT LEAVE ENDS OF BARS EXPOSED, NOR DRIVE INTO DIRT OR JOINT BETWEEN ENDS OF SACKS – SEE DETAIL 5/3
6. ALL BACKFILL SHALL BE WITH SUITABLE MATERIAL FROM EXCAVATION AND SHALL BE COMPACTED TO 90 PERCENT RELATIVE COMPACTION IN ACCORDANCE WITH ASTM TEST METHOD D1557
7. SACKS SHALL BE PLACED SO THAT THEY ARE HORIZONTAL OR SLOPING TOWARDS BANK. SACKS SLOPING AWAY FROM BANK WILL NOT BE ACCEPTED.
8. IT IS MANDATORY THAT SCVWD INSPECTOR BE NOTIFIED AT LEAST 48 HOURS BEFORE CONSTRUCTION BEGINS. COMPLETE REMOVAL MAY RESULT IF THIS REQUIREMENT IS NOT MET.

THE FOLLOWING NOTES ARE TO BE ADHERED TO BUT ARE NOT TO APPEAR ON THE PLANS

A. OBTAIN CONSTRUCTION/ENCROACHMENT PERMIT FROM THE SCVWD FOR ALL STORM OUTFALL BY SUBMITTING IMPROVEMENT PLANS BEFORE CONTRACT IS OUT TO BID.

B. ON PLAN SUBMITTALS SHOW SUFFICIENT INFORMATION SO THAT THE CROSS SECTION OF EXISTING CREEK AT THE OUTFALL AND FOR A MINIMUM DISTANCE OF 20 FEET BOTH UPSTREAM AND DOWNSTREAM OF OUTFALL CAN BE DETERMINED. ADDITIONAL CROSS SECTION INFORMATION MAY BE REQUESTED BY SCVWD.

C. SHOW ALL INFORMATION REQUIRED ON SHEET 5/1 & 5/2 AND INDICATE THE SIZE AND LOCATION OF TREES NEAR THE OUTFALL.

D. PLAN SUBMITTALS NOT SHOWING THE INFORMATION REQUIRED BY NOTES B AND C WILL NOT BE PROCESSED.

E. USE SAME HORIZONTAL AND VERTICAL SCALE FOR SECTION OF EXISTING CREEK AT OUTFALL.

Santa Clara Valley Water District 5750 Almaden Expressway, San Jose 95118 Phone (408)265-2600 SCALE: N.T.S 6/13/2005 REVISED	PIPE OUTFALL WITH SACKED CONCRETE RIP-RAP	GUIDE 5 / SHEET 6

CadPrinter(HP-IV)

W:\cpru\dwg\details\scvwd_det\Sheet15.dwg

14

FLAP GATE STRUCTURE

Flap gates are needed on outfalls where the adjacent ground is below the high water level (usually 100 year water surface elevation). The flap gates will prevent the back flow of water from the stream on to the adjacent land. Where adjacent land at the stormdrain pipe inlet is higher in elevation than the high water level, a flap gate is not needed. Two options for the placement of a flap gate are shown.

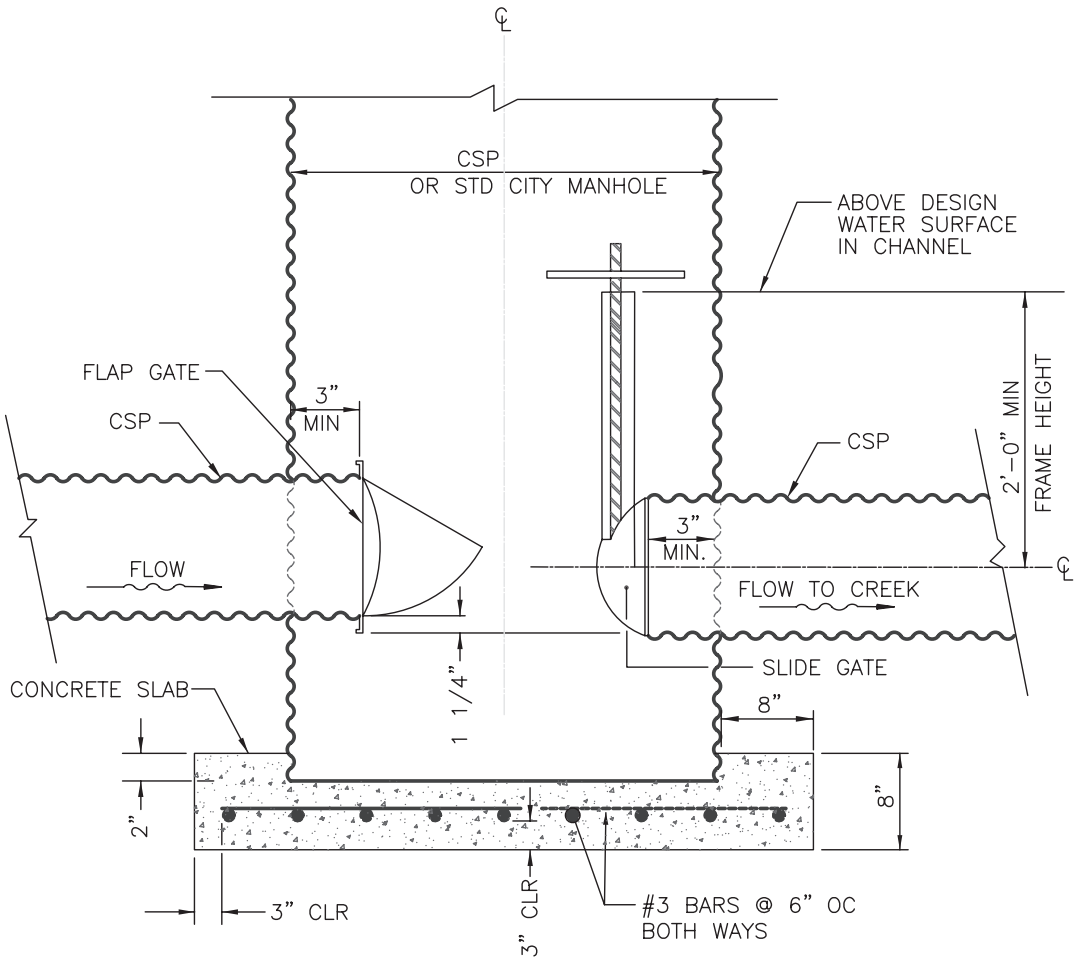

18/1 DETAIL

NOTES

1. Structure to be installed outside SCVWD R/W in area that is easily accessible during rainy periods.
2. Specifications and details of design for the structure are subject to the standards of the local agency that will maintain the structure.

Santa Clara Valley Water District 5750 Almaden Expressway, San Jose 95118 Phone (408)265-2600 SCALE: N.T.S. 9/4/2001 REVISED Sheet44.dwg	FLAP GATE STRUCTURE	GUIDE 18 / 1 SHEET 42

FLAP GATE IN DORMER PIPE

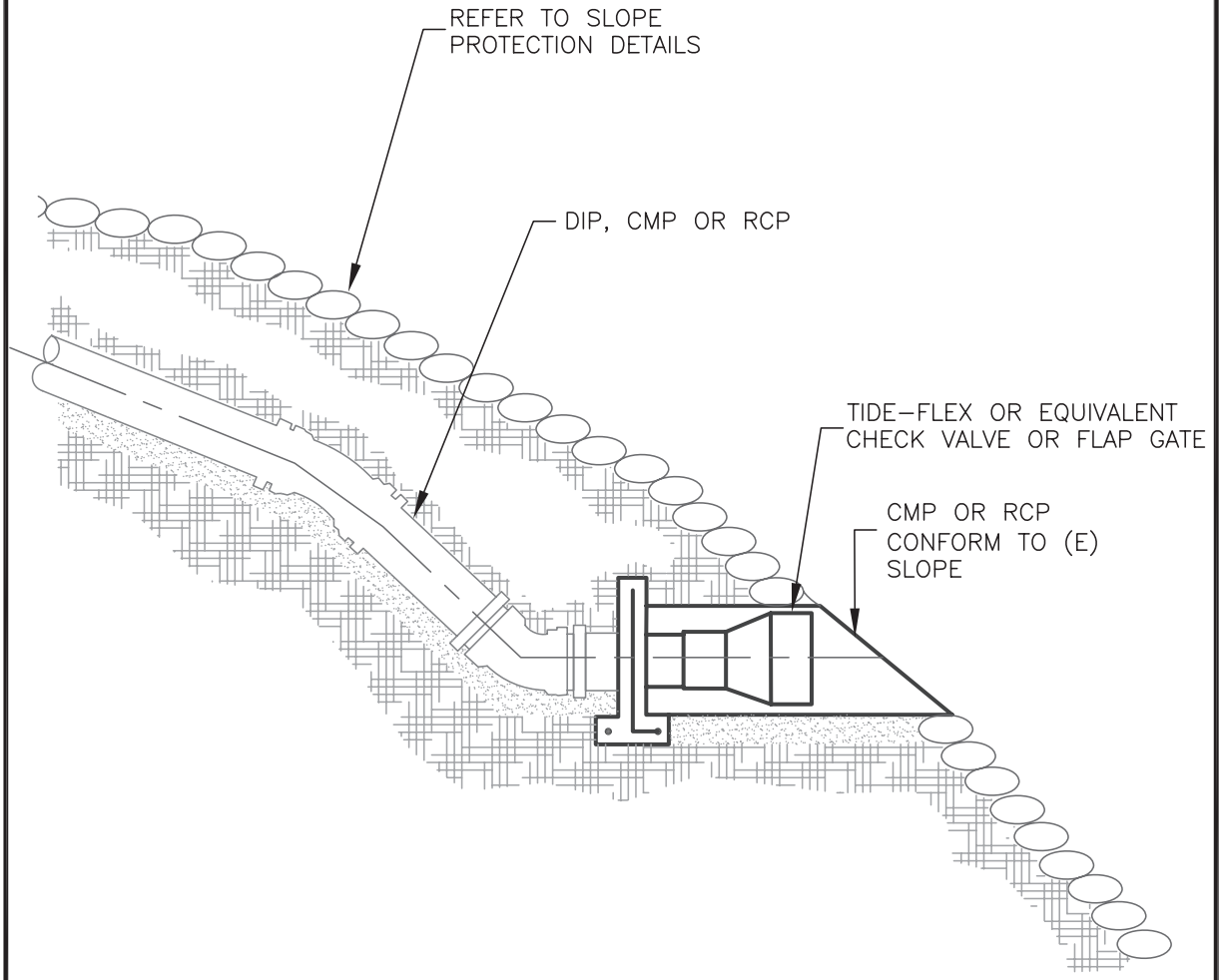

Santa Clara Valley Water District
5750 Almaden Expressway, San Jose 95118
Phone (408)265-2600

SCALE: N.T.S.

Sheet61.dwg 7/11/2005 REVISED

FLAP GATE

GUIDE 28 SHEET 1

54

SCVWD WATER PIPELINE CROSSING

The following pipeline crossing design guides are for water, sewer and other utilities that may cross SCVWD raw (untreated) or treated water pipelines. These are generally large diameter high pressure water mains that supply drinking water to Santa Clara County residents. There may be variations to this guideline if pipeline is located under city/county streets.

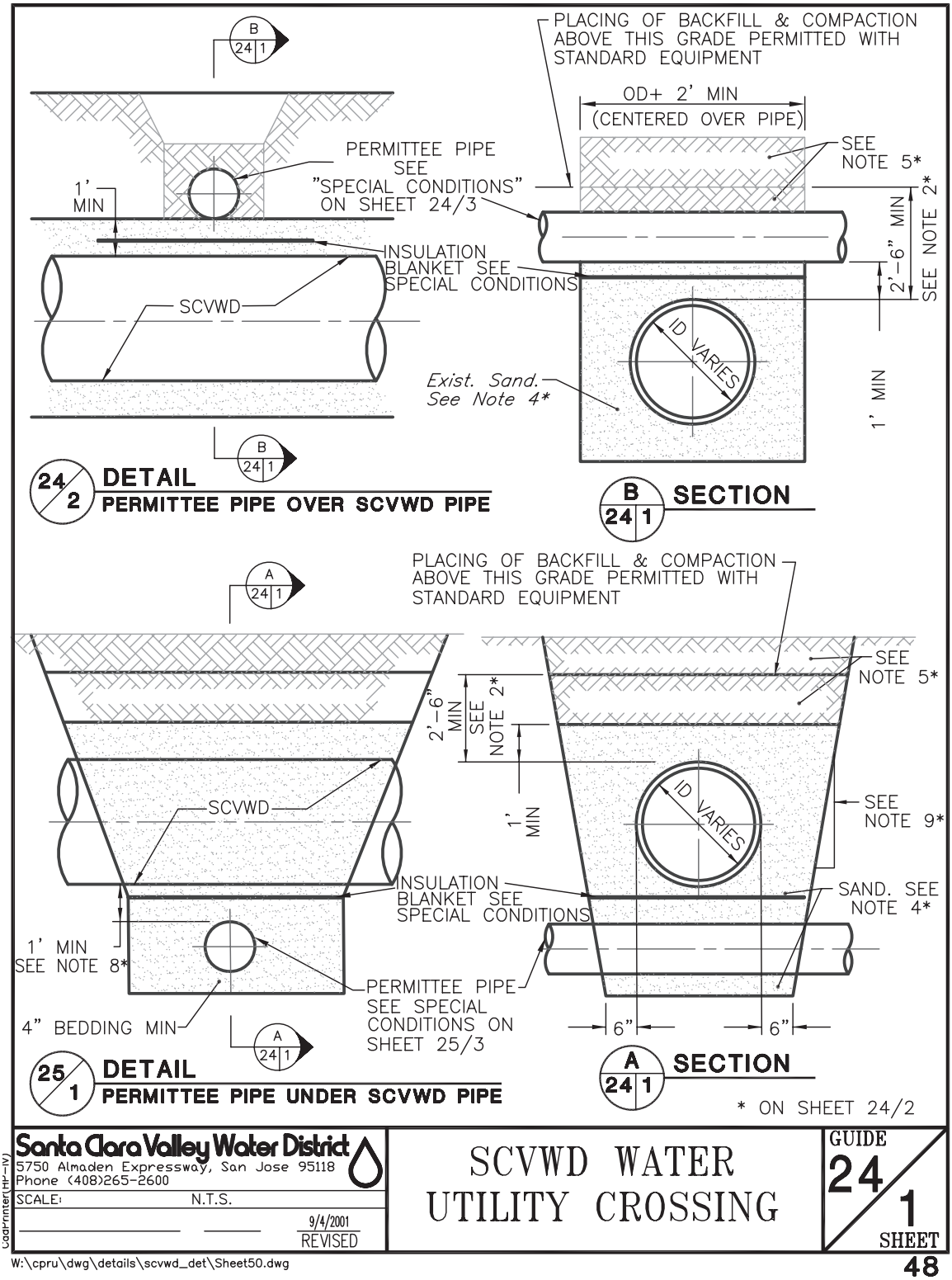

SCVWD WATER PIPELINE CROSSING

THESE NOTES ARE TO APPEAR ON PLANS

1. THE CONTRACTOR SHALL COMPLY WITH THE RULES AND REGULATIONS OF "CAL OSHA" CALIFORNIA LABOR CODE SECTION 6300 AND FOLLOWING.

2. COMPACTION EQUIPMENT SHALL BE EITHER VIBRATORY COMPACTORS OR PNEUMATIC TAMPERS. JETTING MAY BE ALLOWED. STANDARD EXCAVATION AND COMPACTION EQUIPMENT IS NOT PERMISSIBLE WITHIN 30 INCHES OF DISTRICT PIPE. IF, IN THE OPINION OF THE DISTRICT, THE COMPACTION EQUIPMENT USED IS IMPROPER OR IMPROPERLY USED AND HAS DAMAGED THE PIPE, THE PIPE SHALL BE EXPOSED FOR INSPECTION AT THE CONTRACTOR'S EXPENSE. THE CONTRACTOR SHALL THEN REPAIR DAMAGE, IF ANY, AND PROCEED WITH THE BACKFILLING WITH EQUIPMENT APPROVED BY THE DISTRICT. IN GENERAL, HAND–OPERATED POWER EQUIPMENT WILL BE CONSIDERED SATISFACTORY FOR USE WITHIN 30 INCHES OF THE DISTRICT'S PIPE.

3. PIPE TRENCH EXCAVATION AND BACKFILL SHALL CONFORM TO THE PROVISIONS OF SECTION 19 OF THE STATE STANDARD SPECIFICATIONS EXCEPT AS HEREIN MODIFIED.

4. COMPACTED SAND BACKFILL MATERIAL SHALL BE CLEAN, HARD, SOUND AND DURABLE. IT SHALL HAVE A SAND EQUIVALENT VALUE OF NOT LESS THAN 30. THE PERCENTAGE COMPOSITION BY WEIGHT SHALL CONFORM TO THE FOLLOWING GRADATION:

SIEVE SIZE	PERCENT PASSING
3/4 Inch	100
3/8 Inch	75 TO 100
#4	60 TO 100
#20	0 TO 40
#200	0 TO 5

THE MATERIAL SHALL BE FREE FROM DELETERIOUS COATINGS, CLAY BALLS, ROOTS, BARK, STICKS, RAGS AND OTHER EXTRANEOUS MATERIAL. SAND BACKFILL SHALL BE COMPACTED BY APPROVED METHODS TO A DENSITY OF AT LEAST 90 PERCENT OF MAXIMUM DRY DENSITY.

5. BACKFILL AND COMPACTION REQUIREMENTS ABOVE THE NOTED LIMITS SHALL BE TO THE SPECIFICATIONS OF AGENCY HAVING JURISDICTION.

6. ALL EXCAVATION WITHIN 12 INCHES OF DISTRICT'S PIPE IS TO BE BY HAND METHODS.

7. CONTACT SANTA CLARA VALLEY WATER DISTRICT TWO WORKING DAYS PRIOR OF ANY WORK WITHIN_____FEET OF CENTER LINE OF THE DISTRICT PIPE. PHONE 265–2600, CONSTRUCTION ADMINISTRATION UNIT.

8. FOR UNDERCROSSING, SANTA CLARA VALLEY WATER DISTRICT PIPE SHALL BE SUPPORTED DURING TRENCHING OPERATIONS IF DEEMED NECESSARY BY THE DISTRICT INSPECTOR. ANY TYPE OF PIPE COULD BE USED IF CLEARANCE TO DISTRICT PIPE BOTTOM IS AT LEAST 2 FEET. BACKFILL AND COMPACTION OF PERMITTEE'S PIPE TO BE COMPLETED BEFORE BACKFILLING SCVWD PIPE.

9. SLOPES SHOWN ARE NOT TO SCALE AND ARE INTENDED TO INDICATE NATURAL ANGLE OF REPOSE OF BACKFILL MATERIAL.

Santa Clara Valley Water District
5750 Almaden Expressway, San Jose 95118
Phone (408)265-2600

SCALE: N.T.S

9/4/2001
REVISED

SCVWD WATER UTILITY CROSSING

GUIDE 24 / 2 SHEET

CadPrinter(HP-IV)

W:\cpru\dwg\details\scvwd_det\Sheet51.dwg

49

SCVWD WATER PIPELINE CROSSING

SPECIAL CONDITIONS FOR PIPE CROSSINGS OF DISTRICT UNDERGROUND FACILITIES

A. PIPELINES

1. WITHIN_____FEET OF CENTER LINE OF SCVWD PIPELINE, PERMITTEE IS TO INSTALL RIGID STEEL, CAST IRON, OR REINFORCED PLASTIC MORTAR PIPE WITH WELDED, FLANGED, OR MECHANICAL JOINTS AND ENCLOSE ALL CABLES (TELEPHONE, ELECTRIC, etc.) IN RIGID STEEL CONDUIT. BY ELECTING TO DO OTHERWISE, PERMITTEE THEREBY AGREES THAT THE SCVWD HAS NO RESPONSIBILITY FOR DAMAGE OF ANY KIND TO THE CROSSING, INCLUDING THAT WHICH MAY OCCUR DURING FUTURE MAINTENANCE, REPAIR OR REPLACEMENT OF DISTRICT'S FACILITY. FOR EXCEPTION, SEE NOTE 8 ON SHEET 24/2.
2. WHEN THE PERMITTE PIPE CROSSING OVER A SCVWD TREATED WATER PIPELINE IS A SEWAGE PIPE OR UNDER WITH A SEWAGE FORCE MAIN, THE SEWAGE PIPE MUST BE ENCLOSED IN A CONTINUOUS SLEEVE FOR A DISTANCE OF 10', MEASURED HORIZONTALLY AND PERPENDICULAR FROM SCVWD'S TREATED WATER PIPELINE (BOTH SIDE). THE SLEEVE SHALL BE STEEL WITH A MINIMUM WALL THICKNESS OF 1/4".
3. IF THE SEWAGE PIPE IS 24" IN DIAMETER OR GRATER, THE INSTALLATION SHOULD BE REVIEWED AND APPROVED BE THE STATE DEPARTMENT OF HEALTH SERVICES PRIOR TO CONSTRUCTION.

B. CORROSION CONTROL – CATHODIC PROTECTION:

1. PERMITTEE HEREBY WAIVES ALL CLAIMS FOR DAMAGES TO FACILITIES BEING INSTALLED UNDER THIS PERMIT, FROM ELECTRICAL INTERFERENCE OR SIMILAR ACTION, RESULTING FROM OR CONNECTED WITH THE SCVWD OPERATION OF ANY EXISTING OR FUTURE CATHODIC PROTECTION SYSTEM ON OR IN VICINITY OF EASEMENTS OWNED BY THE DISTRICT.
2. BY EXERCISE OF THIS PERMIT, PERMITTEE AGREES TO BE RESPONSIBLE FOR ANY DAMAGE TO THE SCVWD FACILITIES WHICH MAY OCCUR AS THE RESULT OF THE INSTALLATION OF THE PERMITTEE'S CATHODIC PROTECTION FACILITIES.
3. PERMITTEE HEREBY AGREES TO REMOVE BY ELECTRICAL DRAINAGE OR OTHER METHOD APPROVED BY SCVWD, AT NO COST TO THE DISTRICT, CATHODIC INTERFERENCE OCCURING ON THE SCVWD FACILITIES WHICH, IN THE OPINION OF THE DISTRICT, RESULTS IN DAMAGE TO ITS STRUCTURES AND WHICH OCCURS AS A RESULT OF THE HEREIN PERMITTED INSTALLATION OF UNDERGROUND STRUCTURES OR CATHODIC PROTECTION DEVICES. THE AMOUNT OF ELECTRICAL DRAINAGE REQUIRED TO REMOVE SAID CATHODIC INTERFERENCE SHALL BE DETERMINED BY FIELD TESTS MUTUALLY CONDUCTED BY SCVWD AND PERMITTEE.
4. WHEN THE CLEARANCE SEPARATING METALLIC PIPELINES IS 24" OR LESS, AN INSULATING BLANKET IS TO BE INSTALLED. THE BLANKET SHALL BE SQUARE AND 2' LARGER THAN THE DIAMETER OF THE LARGER PIPE. THE BLANKET SHALL BE 1/4" THICK AND SHALL BE NEOPRENE, BUTYL RUBBER, PVC OR MICARTA INSULATING BLANKET.
5. BLANKET SHALL BE INSTALLED ON SOIL BACK FILL AND CENTERED BETWEEN PIPES.

Santa Clara Valley Water District 5750 Almaden Expressway, San Jose 95118 Phone (408)265-2600 SCALE: N.T.S 9/4/2001 REVISED	SCVWD WATER UTILITY CROSSING	GUIDE 24 / 3 SHEET 50

CadPrinter(HP-IV)
W:\cpru\dwg\details\scvwd_det\Sheet52.dwg

PIPELINE PARALLEL TO SCVWD WATER PIPELINE

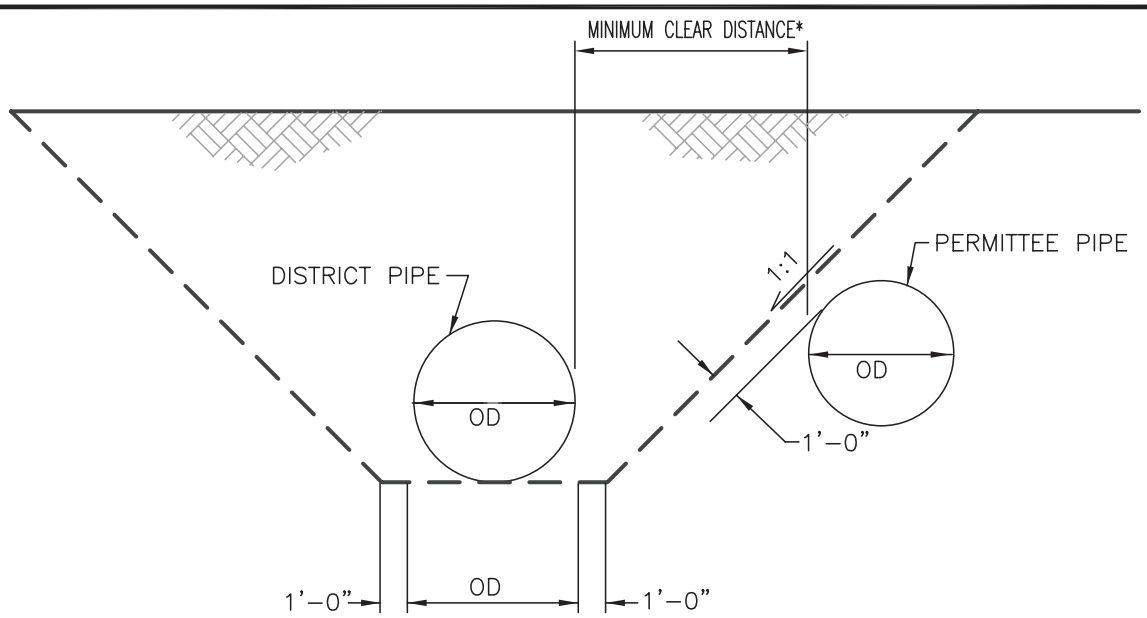

25/1 **DETAIL**
PERMITTEE PIPE ABOVE DISTRICT PIPE

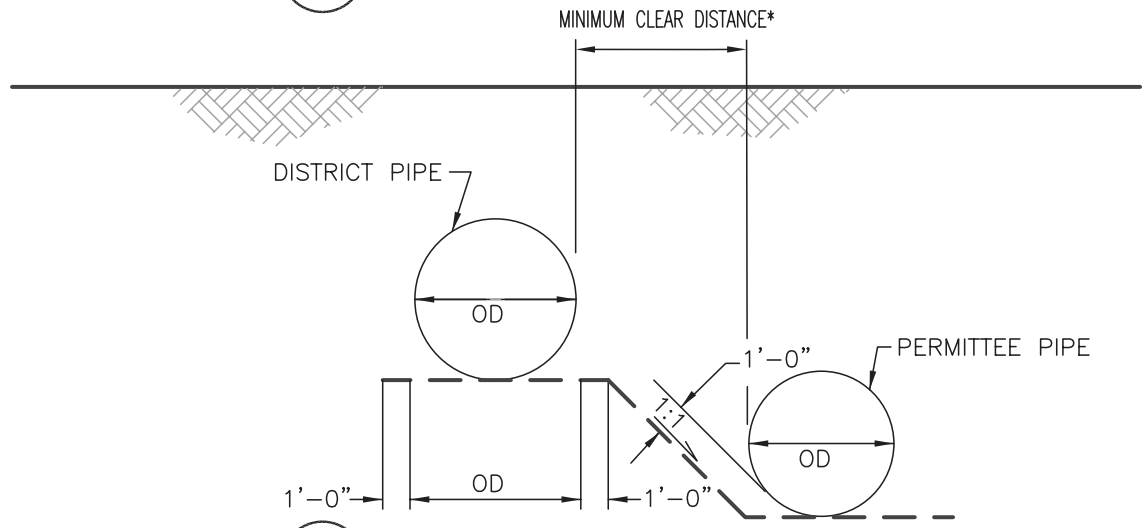

25/2 **DETAIL**
PERMITTEE PIPE BELOW DISTRICT PIPE

* FOR INSTALLATION OF SEWAGE OR NON–POTABLE WATER PIPES PARALLEL WITH SCVWD'S TREATED WATER LINES, THE MINIMUM CLEAR DISTANCE IS 10 FEET. INSTALLATIONS WITH PROPOSED CLEAR DISTANCES LESS THAN 10 FEET MUST BE REVIEWED AND APPROVED BY THE DEPARTMENT OF HEALTH SERVICES. SEWAGE AND NON POTABLE WATER PIPES SHOULD BE INSTALLED BELOW SCVWD'S TREATED WATER LINE.

Santa Clara Valley Water District 5750 Almaden Expressway, San Jose 95118 Phone (408)265-2600 SCALE: N.T.S. 9/4/2001 REVISED	CLEARANCE FOR PIPELINES PARALLEL TO WATER UTILITY PIPE	GUIDE 25 / 1 SHEET 51

CadPrinter(HP–IV)
W:\cpru\dwg\details\scvwd_det\Sheet53.dwg

UTILITY CROSSING UNDER CREEKS

Place utilities on the downstream face of bridge and culvert crossings. Downstream face is preferred so as to not be damaged during debris removal activities. Exposed sanitary sewer, gas lines and treated water lines should be sleeved or otherwise protected to prevent breakage. Utilities may not be placed within the waterway, opening of the bridge or culvert. Utility crossings using direction bore or jack and bore methods are the preferred methods for under stream crossing.

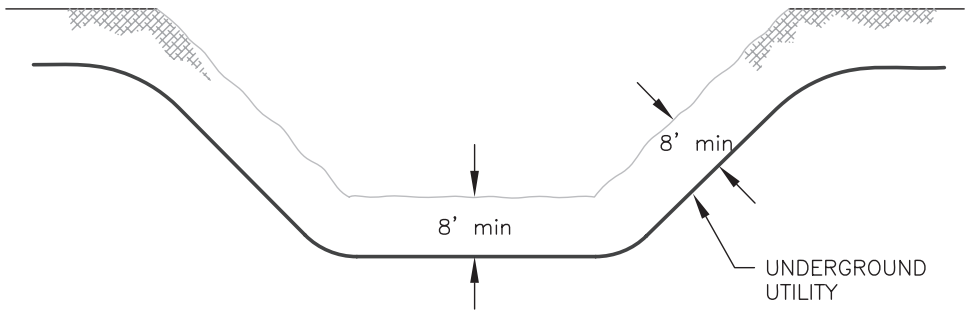

12/2 DETAIL
DIRECTIONAL BORE CONSTRUCTION
UNDER UNIMPROVED CREEK

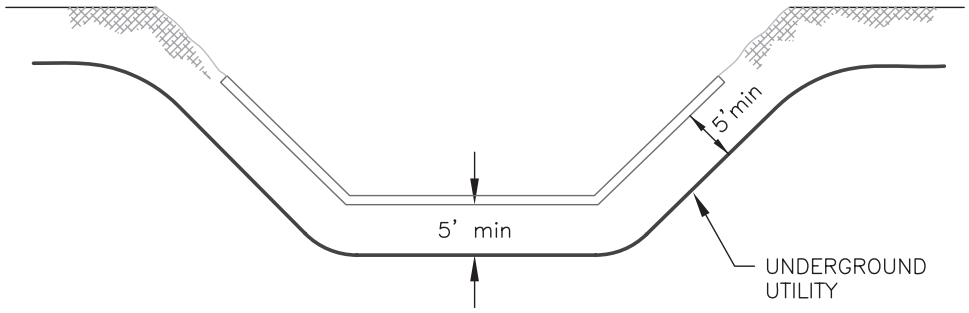

12/3 DETAIL
DIRECTIONAL BORE CONSTRUCTION
UNDER MODIFIED CREEK

Santa Clara Valley Water District
5750 Almaden Expressway, San Jose 95118
Phone (408)265-2600
SCALE: N.T.S.
9/4/2001
REVISED

UTILITY CROSSING
UNDER CREEKS
(Directional Bore Construction)

GUIDE 12
1 SHEET
26

CadPrinter(HP-IV)
W:\cpru\dwg\details\scvwd_det\Sheet27.dwg

UTILITY CROSSING UNDER CREEKS

This type of utility crossing under a creek is not preferred because of the damage it can cause to riparian areas, bank soil structure and impacts to water quality. Permits are needed from resource agencies. This option may be permissible only in rare cases for small, rural streams.

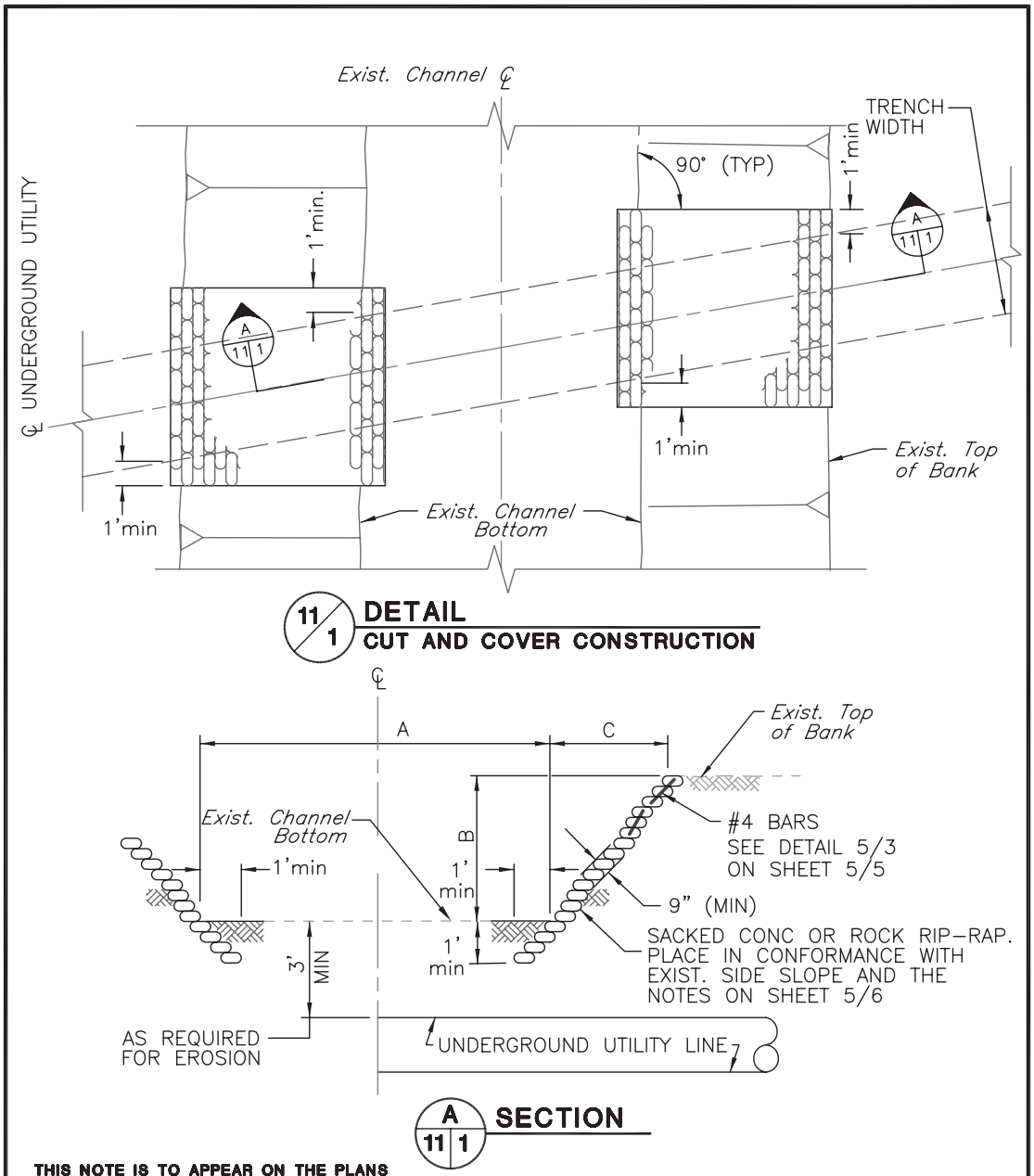

THIS NOTE IS TO APPEAR ON THE PLANS

All back fill shall be with suitable material from excavation to 90% compaction. If 90% compaction is not attained, placement of sacked concrete slope protection is required.

Santa Clara Valley Water District
5750 Almaden Expressway, San Jose 95118
Phone (408)265-2600

SCALE: N.T.S.

9/4/2001 REVISED

UTILITY CROSSING UNDER CREEK

GUIDE 11/1 SHEET 25

CadPrinter(HP-IV)

W:\cpru\dwg\details\scvwd_det\Sheet26.dwg

GUIDANCE FOR TRAIL DESIGN

For Trails next to Streams and Streamside Resources

INTRODUCTION

The guidelines and details in this Design Guide are intended to provide clarification to G&S IX.A and IX.A.2, which discuss design and construction of trails next to streams and riparian areas. Most of the guidelines and details, which are specifically related to streams, grading and riparian resources, have been excerpted from the document, Uniform Interjurisdictional Trail Design, Use and Management Guidelines (UD) (April 15, 1999), which was prepared by the Santa Clara County Parks and Recreation Department.

GENERAL GUIDELINES FOR PROTECTION OF RIPARIAN HABITAT

While trails are often located near natural and streamside areas for recreation and enjoyment purposes, it is important that the construction, design and use of the trail not negatively impact the nearby stream and stream resources that users of the trail want to enjoy. A biological resource assessment will be required for trail routes along streams or creeks. While there is no standard setback, the general guideline is to locate the trail adjacent to - not within - the riparian corridor.

In designing the trail, **the goal is to remove the minimum amount of vegetation as necessary** to accommodate the trail clearing width and to mitigat and restore riparian habitat. Consideration should be given to acquiring additional land rights, where feasible, to place the trail outside of the riparian corridor. In addition, the following guidelines should be followed:

- To control trail use and prevent environmental damage, the design should include barriers such as fences, vegetation, stiles and fallen trees. (UD – 1.3.1.3)
- To the maximum extent feasible, trail alignment should avoid impacts to known special status plants and animal habitats. In special status species areas, trail use may be limited as appropriate to ensure protection of these resources. (UD – 1.3.2.1)
- Revegetation or enhancement will be undertaken where any sensitive habitat or special status species habitat will be disturbed by construction. The design of an appropriate revegetation program shall fully compensate for the lost habitat and shall be designed by a qualified biologist. Riparian and wetland habitat will typically be mitigated at a 3:1 ratio for high quality habitat areas and at a lower ratio where lower habitat quality justifies a lower ratio. Locally native plants will be utilized in all mitigation work. (UD – 1.3.3.6)
- Any cut or fill slopes adjacent to the trail shall be immediately reseeded or replanted. Vegetation will vary by location and surrounding landscape context.

FOR MORE INFORMATION

Refer to sections in this Design Guide for protection riparian vegetation and planting guidelines.

GENERAL GUIDELINES FOR SITING OF TRAILS NEXT TO STREAMS/STREAM CROSSINGS

The objective is to set trails back from the top of bank to avoid erosion over time and protect the existing riparian area.

- Use existing maintenance trails, access route and levees wherever possible to minimize impacts of new construction in riparian zones (UD – 1.3.2.3)
- When parallel to a stream or riparian zone and not located on a levee, new trails should be located behind the top of bank or at the back or outside edge of the riparian zone – except where topographic, resource management, or other constraints make this infeasible or undesirable. (UD – 1.3.3.1)

- Trails in areas of moderate or difficult terrain and adjacent to a riparian zone shall be composed of natural materials or shall be designed to minimize disturbance, and the need for drainage structures. (UD – 1.3.3.2)
- Trail crossings of streams and drainages shall be designed to minimize disturbance through the use of bridges or culverts, whichever is least environmentally damaging. Bridges and culverts should be designed so that they visually and functionally blend with the environment. (UD – 1.3.3.3)
- New native riparian vegetation should be planted in the setback zone, where practical, to complement existing vegetation (UD – 1.3.3.4)
- Trails will avoid wetlands, including seasonal wetlands, wherever possible. Trails adjacent to wetlands will be constructed so that trail fills avoid wetland impacts. (UD – 1.3.3.5)
- Locate trail alignment and crossings under bridges above the 100 year or 1% flood water surface elevation.
- Trail alignment will be limited to one side of the stream to minimize impacts to habitat.
- Trail use will generally be limited to the hours between dawn and dusk to minimize impacts to wildlife.
- Lighting of trails should be avoided. Exceptions include security lighting in downtown commercial and entertainment areas where lighting should be minimized.

GENERAL GUIDELINES FOR GRADING AND DRAINAGE

- No significant grading as defined by local ordinances will be used for trail construction unless in conjunction with an approved development project. (UD – 3.5.1)
- The degree of cut allowed on a slope depends on the soil type, hardness and surrounding natural resources. Cuts should be contoured to blend with the natural slopes. Berms of earth, rocks or wood may be necessary. (UD – 3.5.2)
- Use limited terracing or building steps to avoid large-scale grading. Reinforce steps with stone or wood. (UD – 3.5.3)
- Surface water shall be diverted from trails by cross sloping the trail tread between 2 and 3%. (UD – 3.5.4)
- Where there is potential for significant soil erosion, require a specific erosion control plan. (UD – 3.5.5)
- Do not locate irrigation systems within 2 feet of the edge of the trail. Irrigation for turf areas around a trail should use only a pop-up variety of irrigation head. To avoid erosion and undercutting of the trail, the irrigation system should be controlled so that only incidental spray might reach the trail surface and edge. (UD – 3.5.6)
- Select plants for streamside areas that do not require irrigation beyond an establishment period.
- Use permeable pavements where possible.
- Where overland direction of drainage away from the creek is constrained, provide positive drainage.

GENERAL DESIGN AND AESTHETIC PLANS AND SECTIONS

In addition to the excerpted guidelines above, this section also includes 7 plans and/or sections to help guide the design and placement of trails taken from the Santa Clara County Parks Departments Uniform Interjurisdictional Trail Design manual.

- Design of Urban Shared-Use Trails (T-1)
- Section: Trail Adjacent to Creek, Park, or Open Space (T-5A)
- Plan: Trail Adjacent to Creek, Park or Open Space (T-5B)
- Plan: Design of a Trail on a Levee (T-15)
- Plan and Section: Levee Trail Undercrossing (T-16)
- Creek Crossings and Water Quality (T-17)
- Trail Placement Adjacent to Streams (T-18)

www.parkhere.org

Urban Shared-Use Trail Sections T-1

Uniform Interjurisdictional Trail Design, Use, and Management Guidelines
Santa Clara County Interjurisdictional Trails Committee

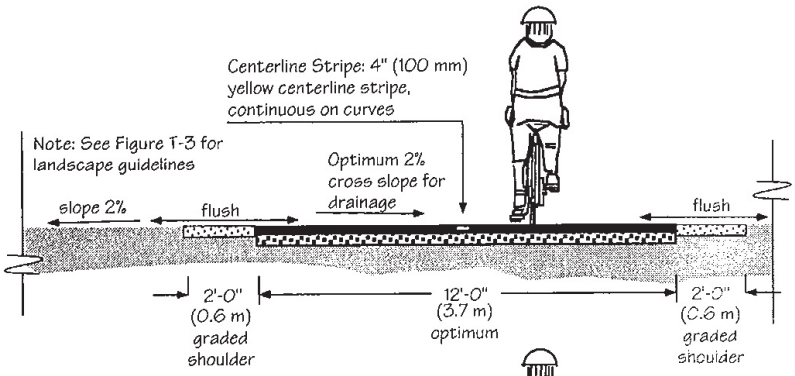

Paved Trail
(See Figure T-2, A and B)
Section A

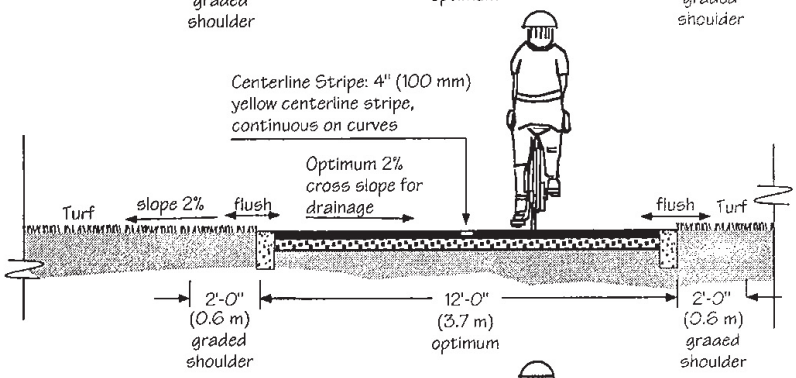

Paved Trail
in Turf Area
(See Figure T-2, C)
Section B

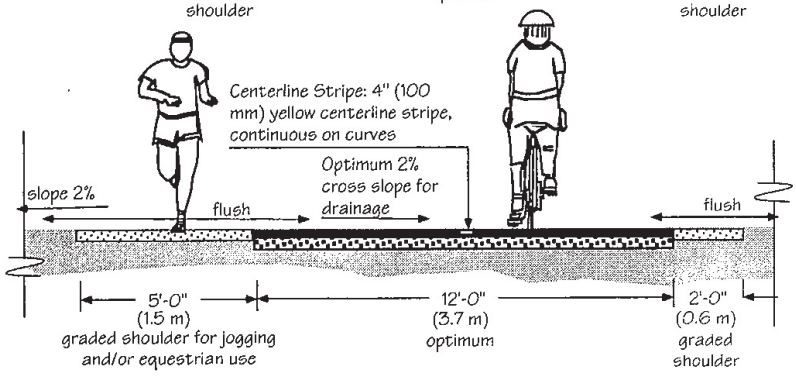

Combination Paved Trail and
Unpaved Jogging Trail
(See Figure T-2, A and B)
Section C

Related Policies: UD-2.2.2; UD-3.5.4; UD-4.11.1; UM-3.4

Notes:

- For natural-surfaced trail cross-sections and urban Shared-Use Trails that include an equestrian shoulder, refer to the *1995 Countywide Trails Master Plan*, Figures G-2 and G-3.
- Trail shoulders: 2' (0.6 m) graded shoulder; 2' (0.6 m) minimum vegetation clearance; prune all brush over 12" (0.3 m) in height and 1/2" (12 mm) dia. that extends into trailway.
- Centerline stripes should be used along trails. Solid centerline stripes should be used where there is heavy use, on curves greater than 100 feet long (30.5 m) with restricted sight distances, and where the path is unlighted and nighttime riding is expected. Dashed stripes should be used where there is heavy use but only where sight distances permit.
- "Optimum": The best or most favorable condition for a particular trail situation from the perspective of responsible management
- Reference Also: *Highway Design Manual, Chapter 1000 Bikeway Planning and Design; Topic 1003 - Design Criteria; and Topic 1004 - Uniform Signs.* California State Department of Transportation.

Final: April 15, 1999

SECTION: TRAIL ADJACENT TO CREEK, PARK OR OPEN SPACE

Trail Adjacent to Creek, Park, or Open Space T-5A

Uniform Interjurisdictional Trail Design, Use, and Management Guidelines
Santa Clara County Interjurisdictional Trails Committee

See Also Figure T-5B

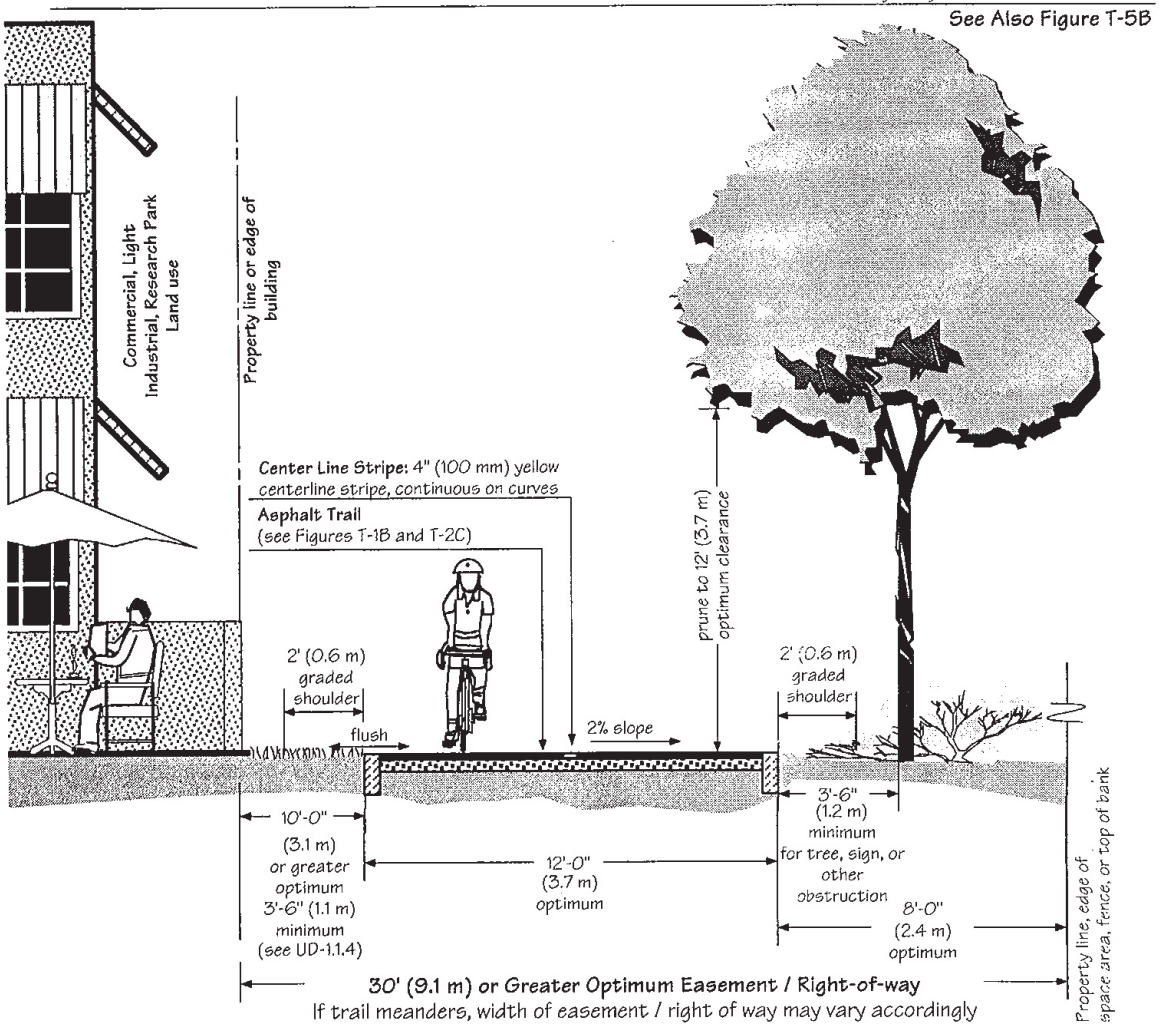

Related Policies: UD-1.1.1; UD-1.1.4; UD-2.2.2; UD-3.5.6; UD-4.11.1; UM-3.4

Notes:

- Maximum grade of 5% is optimum; 8.33% maximum for short sections.
- Trail shoulders: 2' (0.6 m) graded shoulder / 2' (0.6 m) minimum vegetation clearance; prune all brush over 12" (0.3 m) in height and 1/2" (12 mm) dia. that extends into trailway.
- Centerline stripes should be used along trails. Solid centerline stripes should be used where there is heavy use, on curves greater than 100 feet long (30.5 m) with restricted sight distances, and where the path is unlighted and nighttime riding is expected. Dashed stripes should be used where there is heavy use but only where sight distances permit.
- "Optimum": The best or most favorable condition for a particular trail situation from the perspective of responsible management
- Reference Also: *Highway Design Manual, Chapter 1000 Bikeway Planning and Design; Topic 1003 - Design Criteria; and Topic 1004 - Uniform Signs.* California State Department of Transportation.

Final: April 15, 1999

PLAN: TRAIL AJACENT TO CREEK, PARK OR OPENSPACE

T-5B Plan: Trail Adjacent to Creek, Park, or Open Space

Uniform Interjurisdictional Trail Design, Use, and Management Guidelines
Santa Clara County Interjurisdictional Trails Committee

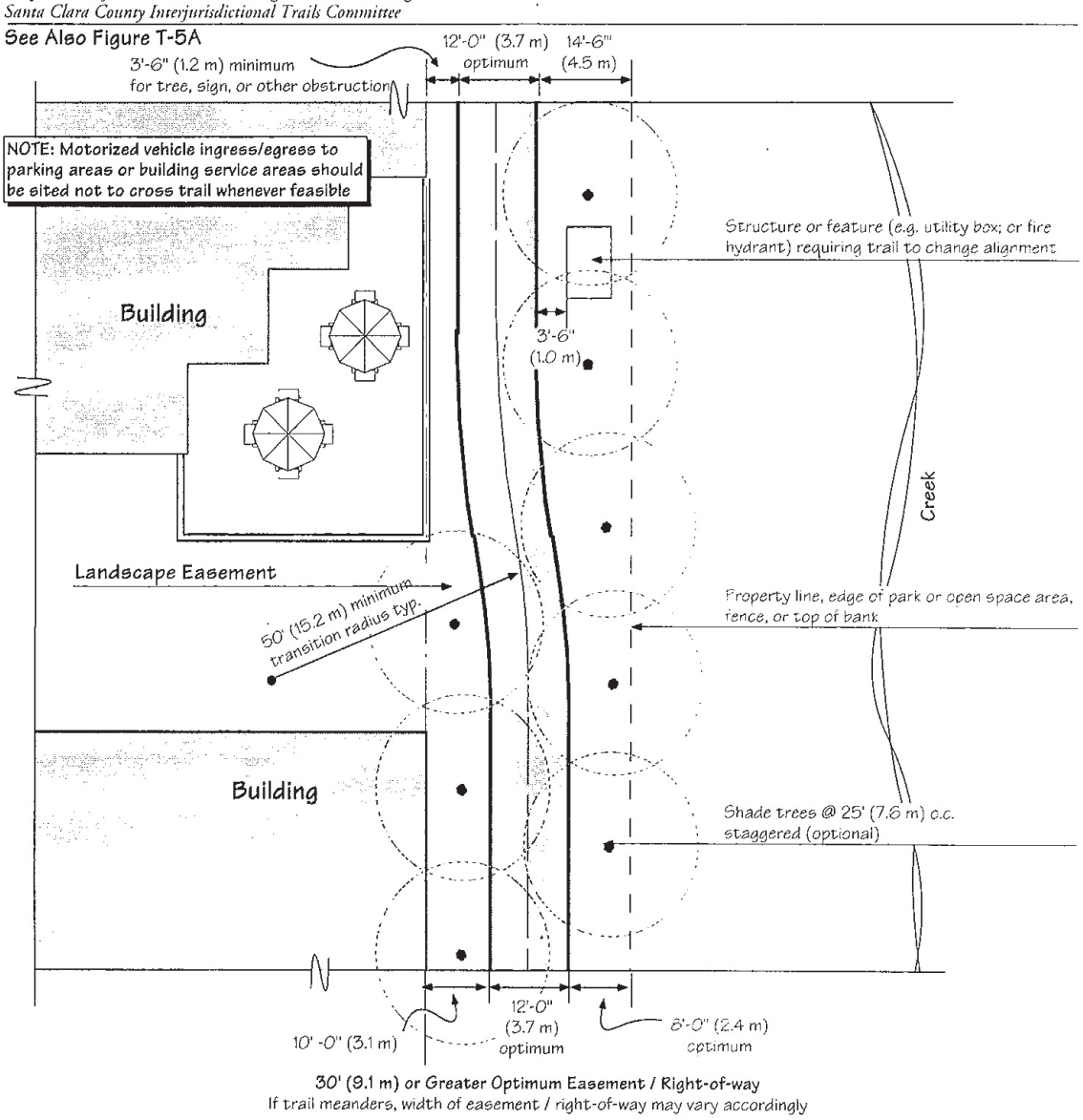

Related Policies: UD-1.1.1; UD-1.1.4; UD 2.2.2; UD-4.11.1

- "Optimum": The best or most favorable condition for a particular trail situation from the perspective of responsible management
- Reference Also: *Highway Design Manual, Chapter 1000 Bikeway Planning and Design; Topic 1003 - Design Criteria; and Topic 1004 - Uniform Signs.* California State Department of Transportation.

Final: April 15, 1999

T-15 Plan: Trail on Levee

Uniform Interjurisdictional Trail Design, Use, and Management Guidelines
Santa Clara County Interjurisdictional Trails Committee

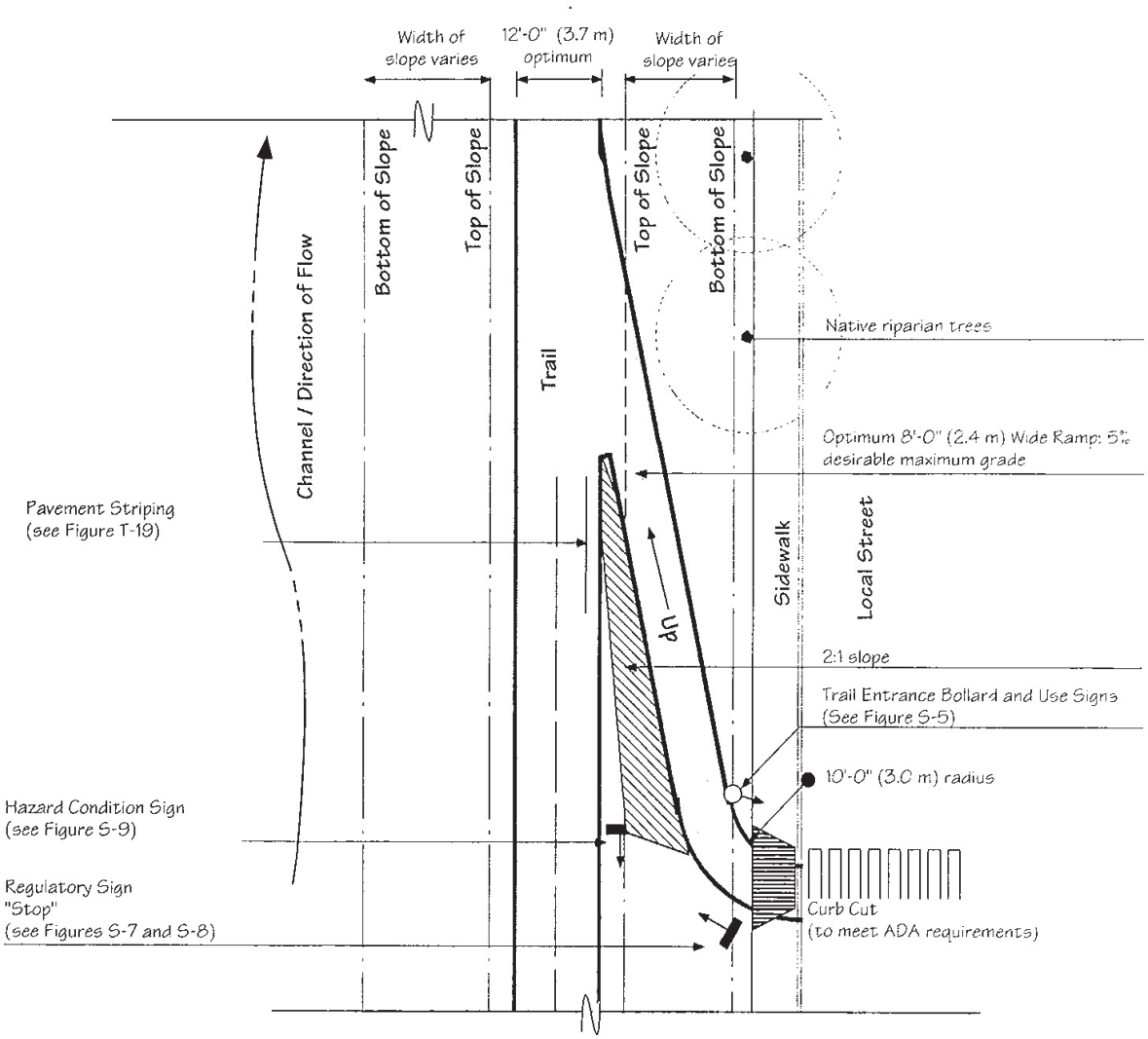

Related Policies: UD-1.3.2.3

- "Optimum": The best or most favorable condition for a particular trail situation from the perspective of responsible management.
- Reference Also: *Highway Design Manual, Chapter 1000 Bikeway Planning and Design; Topic 1003 - Design Criteria; and Topic 1004 - Uniform Signs.* California State Department of Transportation.

Final: April 15, 1999

Plan and Section: Levee Trail Undercrossing T-16

Uniform Interjurisdictional Trail Design, Use, and Management Guidelines
Santa Clara County Interjurisdictional Trails Committee

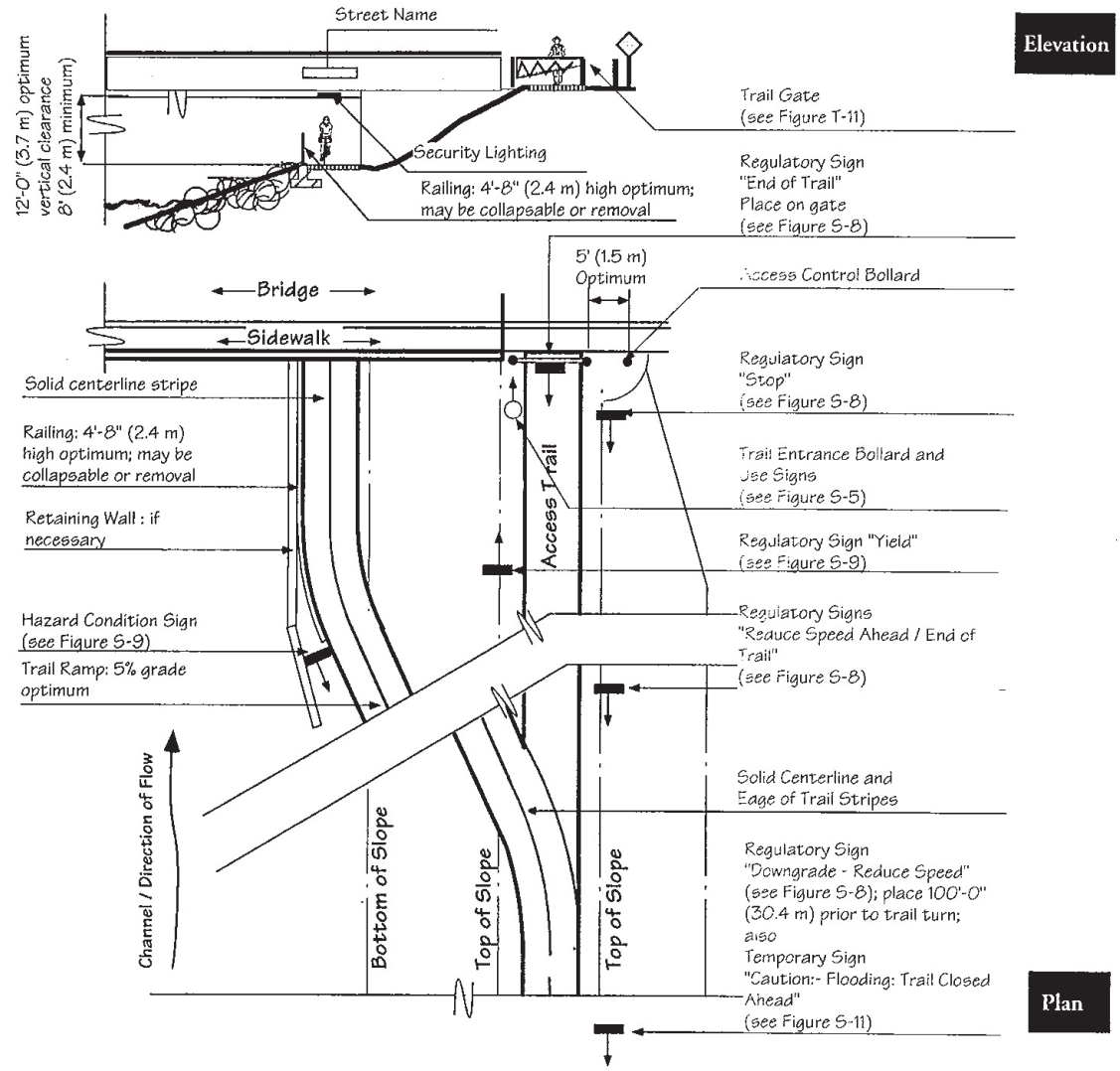

Related Policies: UD-2.6; UD 4.1.5

Notes

- Trail connections will likely occur on both sides of road bridge

- "Optimum": The best or most favorable condition for a paticular trail situation from the perspective of responsible management
- Reference Also: *Highway Design Manual, Chapter 1000 Bikeway Planning and Design; Topic 1003 - Design Criteria; and Topic 1004 - Uniform Signs.* California State Department of Transportation.

Final: April 15, 1999

T-17 Creek Crossings & Water Quality

Uniform Interjurisdictional Trail Design, Use, and Management Guidelines
Santa Clara County Interjurisdictional Trails Committee

Bridge major streams and drainages **A**

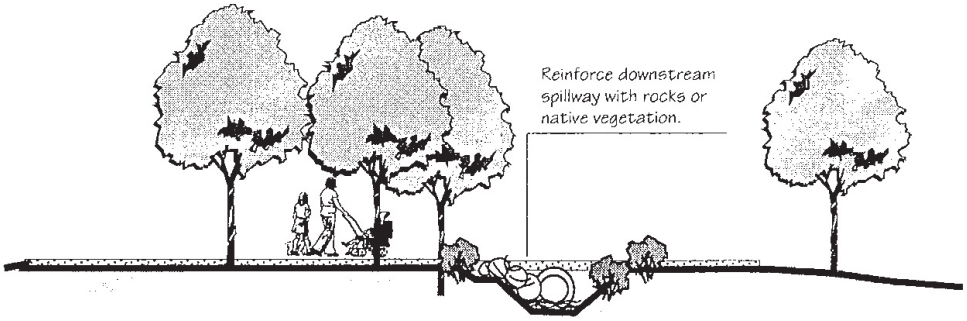

Culvert crossings of small streams and drainages **B**

Related Policies: UD-1.3.3.14

- "Optimum": The best or most favorable condition for a paticular trail situation from the perspective of responsible management
- Reference Also: *Highway Design Manual, Chapter 1000 Bikeway Planning and Design; Topic 1003 - Design Criteria; and Topic 1004 - Uniform Signs.* California State Department of Transportation.

Final: April 15, 1999

Trail Placement Adjacent to Streams T-18

Uniform Interjurisdictional Trail Design, Use, and Management Guidelines
Santa Clara County Interjurisdictional Trails Committee

Relationship to property lines, environmentally sensitive areas & residences

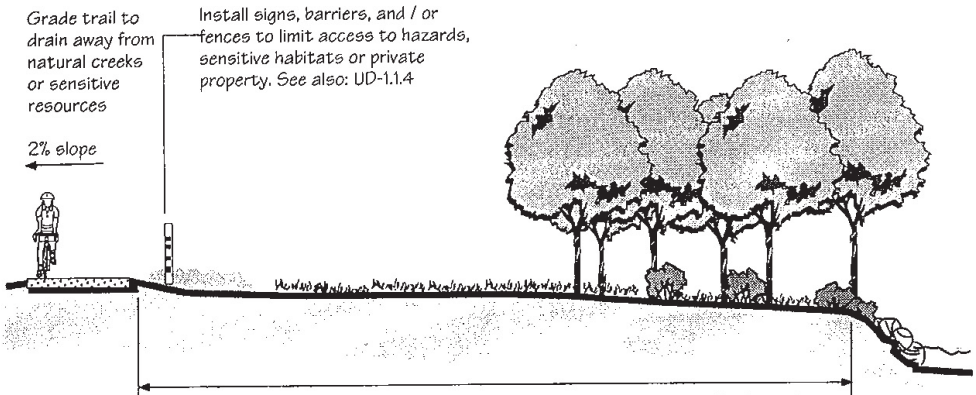

For shared-use trails, provide 150' (46.0 m) setback buffer, where possible, from the top of bank (where the stream is predominantly in its natural state) or 100' (30.4 m) from the outside edge of the riparian zone where there are no opportunities for shared use of levees or existing roadways.
See also: Design Guideline UD 1.3.3.1.

A

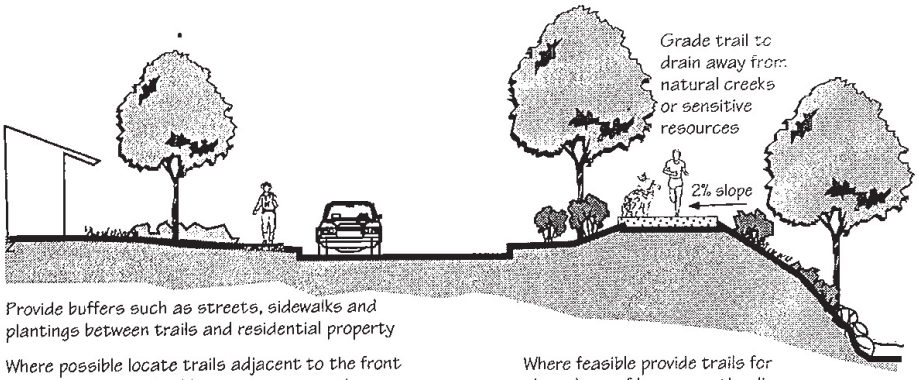

Provide buffers such as streets, sidewalks and plantings between trails and residential property

Where possible locate trails adjacent to the front yards, streets and public open spaces, rather than adjacent to private backyards, storage areas, or utility areas.

See also: Design Guideline UD 2.1, Tables UD-1 and UD-2

Where feasible provide trails for shared use of levees or other linear open spaces.
See also: Figures T-15 and T-16.

B

Related Policies: UD-1.1.1; UD-1.3.3.14; UD 1.1.4

- "Optimum": The best or most favorable condition for a paticular trail situation from the perspective of responsible management
- Reference Also: *Highway Design Manual, Chapter 1000 Bikeway Planning and Design; Topic 1003 - Design Criteria; and Topic 1004 - Uniform Signs.* California State Department of Transportation.

Final: April 15, 1999

GROUNDWATER RESOURCE ASSESSMENT CRITERIA

INTRODUCTION

Any proposed project subject to CEQA where the permitting agency finds that there is potential for groundwater quantity or quality impacts should provide a groundwater assessment that will need to be reviewed. Examples of land use decisions that could impact groundwater and may require a groundwater assessment include:

- Increases in water demand (whether that demand will be served by on-site wells or potentially change the quantity of water pumped by retail water suppliers)
- Land use changes that could impact the quantity or quality of water percolating into the groundwater resource on site such as changes in impervious surface area or the use of dry wells or other stormwater infiltration facilities
- Use of on-site wastewater treatment
- Use of underground chemical storage facilities.

SUBMISSION OF GROUNDWATER ASSESSMENT

The groundwater assessment should be submitted to the appropriate permitting agency for review. Groundwater assessment before a project starts will help the appropriate permitting agency anticipate groundwater management impacts and ensure that groundwater resources, both quantity and quality, are sustained and protected. The required groundwater assessment should include:

General:

- A description of the groundwater basin or basins over which the project lies;
- Identify whether the site is located in a recharge area of the groundwater basin;
- Identify any existing active or abandoned wells on site.

Water Supply:

- Is groundwater expected to be a source of supply to meet the water demand for the project? If so, provide pumping locations and quantities for the proposed project;
  - Describe potential impacts to groundwater recharge on site (due to changes in pervious and impervious surfaces for example);
- Is there currently or will the proposed project be using recycled water? For what uses?

Water Quality:

- Are there any existing contamination sites or plumes?
- Information on the geo-hydrology of the site, including historical depth to water at the site (in different years, seasons, or different hydrologic conditions if known); is the shallowest groundwater part of the drinking water aquifer or perched water above a confining lens or confining layer?
- Identify active drinking water sources and protection zones within the proposed project limit;
  - If known, the vulnerability of the local groundwater to any possible contamination that might occur at the site (the physical barrier effectiveness to use the DWSAP terminology): what the groundwater gradient is on site, the ability of the soil materials to transmit or delay the movement of contamination to the water table;
- Identify locations and risk rankings of possible contaminating activities within the limit of the proposed project area. These include storm runoff devices, other infiltration devices (such as septic or leach fields), chemical storage tanks (for example, dry cleaners and gas stations);
- Provide the information on Best management practices (BMPs) applied within the proposed project area for protecting groundwater and surface water that are used or potentially used as sources of drinking water.

SCVWD FLOOD PROTECTION DETENTION BASIN DESIGN CRITERIA

SCVWD FLOOD PROTECTION DETENTION BASIN DESIGN CRITERIA

This guidance is intended to provide an overview and is to be supplemented with engineering analysis and design. Engineering professionals should refer to the SCVWD Hydrology Manual, the Santa Clara County Drainage Manual, and any design requirements made by permitting agencies.

These design criteria are recommended to be used when detention basins are required to mitigate for impacts to flood conveyance capacity. Separate criteria have been developed for implementing NPDES permit requirements for hydro-modification. There may be some instances where stormwater runoff rates need to be regulated for both flood protection and hydro-modification (HMP) purposes. In those cases, the recommended method of design needs to be as follows: (a) design the basin for the HMP requirements, (b) test the HMP basin design against the flood protection requirements outlined in this section. If the HMP design meets the flood protection requirements, the HMP design achieves both functions. If not, the HMP design would need to be modified by the engineer to accomplish both functions. This may require modifying the storage volume and the orifices/weirs of the HMP basin.

GENERAL DESIGN CRITERIA

The frequency, lateral extent and elevation of flooding should not substantially increase under post development conditions.

The 100-year flood according to pre-development and post-development conditions shall be analyzed and routed through the pond. The 100-year outflow hydrograph shall not be more than the pre-development condition. If there is an existing flooding condition downstream, then the design should also be based on the flow rate and frequency at which flooding occurs.

In general the design of detention facilities should be based on the differential storage between the inflow and the outflow hydrographs. The peak of the outflow hydrograph for the post-design condition shall not exceed that of the pre-design condition.

DEFINITIONS AND DESIGN IMPLICATIONS OF SOME TERMINOLOGIES

Pre-development condition: This is the existing land uses within the tributary watershed, which may be completely rural, and it includes pervious and impervious areas. Using appropriate procedures, the total flow peak and volume may be determined by calculating the flood hydrographs from the pervious and impervious areas and then subsequently combining these two hydrographs.

Post-development condition: With an increase in imperviousness, urbanization within the watershed will result in a higher runoff volume and a different peak flow rate which, again, are obtained by combining the pervious area and impervious area hydrographs from the post-development land use conditions.

Differential peak flow rate and volume: The differential flow values, between the pre- and post-development conditions, represent the effect of urbanization. In order to minimize impacts from flooding, no increase in flow rate or volume is allowed. Thus, mitigation measures are needed. One of the mitigation measures is to achieve peak shaving and volume reduction via a detention basin.

Detention basin routing: The routing (passing-through) of floodwaters through the detention basin could effectively reduce the peak flow and volume at its downstream end due to storage effects. The use of a detention basin is desired to reduce flood peaks.

OPERATION MANUAL AND RULE CURVES

For every stormwater detention facility that is designed to alleviate flood damages or other natural emergencies, guidelines must be established to assure the proper maintenance and safety of the facility. These guidelines should identify whom, when, and how the facility will be managed. The safety elements of operating the facility should be addressed, as should recommendations relating to the ingress-egress to and from the facility.

It is recommended that detention basins be designed to function as multipurpose facilities for recreation as well as for flood attenuation. For this purpose, the facility should be designed with minimum depths of water and relatively flat slopes for the sides of the pond. In the case where detention facilities are designed as multipurpose facilities for recreation, flood and pollution control, a rule curve that specifies the allowable maximum water surface elevations over time should be defined and made as a part of the final operating manual.

SITING OF DETENTION BASINS

- Recommend situating the detention basin closer to the middle of a watershed to provide efficient peak flow and volume reductions.
- Avoid locations near San Francisco Bay or at the lower/downstream end of a watershed.
- Utilize existing topography, such as the selection of a low depressed area to reduce the amount of excavation and the selection of a narrow necking area for outlet control or dam sites, could result in significant savings.
- Avoid locations where the seasonal ground water level may rise above the basin bottom. Ground water flow can have significant effect in the construction and operation of the basin.
- Where multiple detention facilities are on one creek, synchronize operations of these facilities so as not to expand the impact and increase the flow rather than reducing it.

PROTECTION OF RIPARIAN HABITAT AND GROUNDWATER

Detention basins should not be located within the riparian corridor, but may be located within the riparian setback. Geotechnical evaluation may be needed for basins in close proximity to a creek bank. To protect the groundwater from surface water contamination, it is preferable that the stormwater detention facilities be located in impervious areas. Investigations should also be made into the proximity of existing groundwater contamination. Infiltration from an unlined detention basin can exacerbate the movement of a groundwater contamination plume. Groundwater or geologic conditions may require the inclusion of a lining to ensure that the underground water is not contaminated.

TYPES OF ATTENUATION FACILITIES

Off-Stream Facilities: Off-stream basins are preferable because they are generally smaller than in stream types and, hence, more economical. In-stream basins have more restrictions due to environmental concerns. An off-stream detention basin is designed to take the excess flow above a certain prescribed threshold. Stormwater runoff from a watershed is generally collected and transported via storm drains or channels to the detention basin. The outlet of the off-stream basin should be designed to drain flow back to the main stream either by gravity or by pumping if gravity flow is not feasible.

In-Stream Facilities: Instream facilities are not preferred because of the impacts structural modifications may have on the stream. Flow through ponds or detention basins that intercept flow from development with a discharge outlet draining back to the creek to mitigate induced flooding can both be categorized as in-stream facilities. The modified puls or storage-indication method is frequently used as the routing method for the in-stream facility routing. Usually the in-stream facility attenuates the flows through the creek; therefore, the outlet structure should be designed to accommodate the required capacity of the creek. At times, minimum inflows are permitted to flow unimpeded through the detention facility. The design of in stream detention facilities shall be consistent with the design of the ultimate flood control project on that stream.

SIZING OF AN OFF-STREAM DETENTION BASIN

The sizing of an off-stream detention basin involves an iterative design process. Flow over a preset level is diverted through a diversion and control structures such as an overflow weir discharging via either an open channel or a closed conduit into the detention basin. At the lower end of the basin, an outlet draining the flow back into the main stream may be needed. The flow conveying hydraulics for both inflow and outflow of the detention basin must be determined in order to meet the objectives of the flow attenuation in the main stream. This involves a trial and error design process of sizing the basin with its associated storage-discharge relationship to optimize the combined flow at the downstream end.

OUTLET STRUCTURE

The outlet structure should be designed to evacuate the storage volume incidental to flood control (excluding the initial storage) within a short time period to allow for the next incoming storm.

SPILLWAY DESIGN

Every stormwater detention facility should be designed to prevent damages from embankment failure due to overtopping or other causes. Good engineering principles should be implemented in the construction of the embankment and the spillway should be designed to prevent the possibility of over-banking from the spillway design flood.

If the pond volume is less than 15 acre-feet and the depth of water in the pond is less than 6 feet, then the spillway shall be designed for the 100-year flood. If the volume of the pond is between 15 and 50 acre-feet and the depth is between 6 and 25 feet, then the spillway design flood may be based on the 200-year flood. All other impoundments that are larger than defined above should comply with the design criteria of the State of California Division of Safety of Dams (DSOD).

BASIN SLOPES AND LOW FLOW CHANNEL

The recommended side slopes for flood control storage areas within a stormwater detention basin vary with the design of the basin. Earthen slopes or passive vegetated areas should be at a maximum of 3 horizontal to 1 vertical. Turf areas should be at a 4 to 1 or flatter slope to facilitate mowing. The basin floor shall be sloped towards the low flow channel with a minimum slope of 1%. The low flow channel is recommended to carry 1 to 3 percent of the 100-year peak flow.

CHECKLIST FOR DETENTION BASIN DESIGN

- Hydrology map of watershed boundaries, basin layout with contours.
- Summary tables of watershed parameters.
- Inflow hydrographs at key locations.
- Stage, storage, discharge curves.
- Outflow hydrographs after basin routing.
- Basin design drawings with inlet and outlet designs.
- Summary tables of peak flow and volume for pre- and post- conditions.

CHAPTER 5

GUIDANCE FOR HOMEOWNERS

5A. HOW TO PLAN YOUR STREAMSIDE PROJECT

This chapter targets streamside property owners who are planning on:

- Building a new home near or next to a stream
- Adding new floor space onto an existing home near or next to a stream

5B. WHY CONSIDER LOCAL STREAM RESOURCES WHEN BUILDING OR REMODELING YOUR HOME?

A stream is more than just a channel for rainwater in its passage to the Bay. It is a complex, living system where the characteristics of the streambed—its composition, shape, and elevation drop—interact with the dissolved nutrients and organic matter in flowing water to create a dynamic environment rich with plant, animal, and fish life. A number of conditions typify natural streams in their pristine state. These include cool, clear, oxygen-rich water free of contaminants and excess algae; plenty of clean gravel for fish spawning and aquatic insects; a balance of fast, flowing water for spawning and feeding; slow, calm pools for rest; and streamside vegetation to provide shade and food.

Human activities can influence all of these factors. Many animals and plants make their home in the narrow corridor of streamside vegetation known as riparian habitat—the area immediately adjacent to your stream. This high-moisture environment, which covers only a small percentage of the County's watershed, provides food and shelter for a greater variety of wildlife than any other habitat type. This zone is also critical as a migration corridor for many animals, especially where nearby development acts as a barrier to overland travel.

In addition to the biological function of a stream ,the gravel bed provides a conduit for groundwater recharge and ultimately water supply. The stream provides a conduit for conveying drainage water from the land surface including our streets and yards and provides for the conveyance of food water.

Too much water from roofs and paved surfaces in an urban environment has impacts on the stability of the stream channels. The velocity of the water increases which causes erosion and down cutting of the channel. Higher flows can also increase the frequency and depth of flooding. In addition to physical changes to the stream, pollutants from streets and hardened surfaces are carried to the stream, the temperature of the runoff is increased impacting the water quality.

A river seems a magic thing. A magic, moving, living part of the very itself – for it is from the soil, both from its depth and from its surface, that a river has its beginning.

—Laura Gilpin, The Rio Grande, 1949

Even if the stream on or next to your property has been modified and no longer looks like a natural stream corridor, this guidance is still applicable. The water in the stream either flows to another stream or is carried to the Bay, in which case the water quality and stream bank protection concerns are still applicable. In any case, protection or enhancement of the stream corridor will always be betterment to the environment.

If you incorporate the natural features of a stream into your building plans, you will benefit in these ways:

1. **Shade Trees:** Retention of riparian trees can provide a shade canopy for outside uses, and provide for cooler temperatures inside a home during hot summer months.
2. **Safe Slopes:** By not building on or next to streambanks the potential for eroding and destabilizing such slopes, and related impacts to health and safety are reduced.
3. **Stream Stability:** By not placing structures between stream banks, and by reducing the amount of pavement and other impervious surfaces adjacent to a stream, including directing drainage from roofs, driveways and patios away from streams, you will be contributing to stream stability.
4. **Clean Water:** The water quality in local streams and the receiving waters of the bays and ocean will benefit if surface water is directed to vegetated areas before it flows into streams.
5. **Wildlife and Aquatic Life:** Wildlife, such as resident and migratory birds, small mammals, fish and other aquatic life have a better chance of surviving in the urban environment if measures are taken to protect native vegetation, if newly planted vegetation is specific to your watershed and if streams are kept in the most natural condition possible.
6. **Helping Mother Nature:** As many urban and suburban streams have been degraded, opportunities abound for homeowners to restore environmental conditions of local streams, including erosion and streambank repair measures, planting of trees and shrubs suitable to your watershed, and joining with your neighbors to restore a reach of stream.
7. **Open Space and Recreation:** Healthy and intact stream ecosystems are a ready-made open space area for wildlife viewing that can be incorporated in your landscape design, while adding pleasure and amenity to your streamside property.
8. **Buffers Between Homes:** By preserving and maintaining riparian trees and vegetation, and siting structures appropriately, you can maintain or create a visual and physical buffer between other homes in the neighborhood, adding to the privacy and enjoyment of your streamside house.

5C. WHAT PERMITS DO I NEED?

Please consult with your local building department and ask what permits you need to build a new home or expand an existing home. Some communities only require a building permit while others require discretionary design review.

If you are planning to modify a streambank or streambed, you will probably need permits from the California Department of Fish and Game, the Regional Water Quality Control Board and the U.S. Army Corps of Engineers(see Chapter 2, Section K for contact information for permitting agencies). The mission of these agencies includes protection of stream habitats, water flows and water quality, so they will help to provide guidance for your project.

If your project is adjacent to a SCVWD facility or right-of-way, or if your local jurisdiction has chosen not to administer streamside permitting, a SCVWD permit is required. Please contact the SCVWD's Community Projects Review Unit at (408) 265-2607, ext. 2650 to find how to obtain a SCVWD permit. Information is also available at : http://www.valleywater.or/Business_Info_and_Permits/Permits/index.shtm.

5D. HOW TO USE THE STREAMSIDE PERMITTING TOOLS AND GUIDELINES AND STANDARDS FOR LAND USE NEAR STREAMS

As part of a multi-year cooperative process, all of the cities in Santa Clara County, the County, the Santa Clara Valley Water District as well as environmental, business, agricultural and community organizations developed a set of Guidelines and Standards for Land Use Near Streams, which are listed in Chapter 3 of this User Manual. Each local jurisdiction will decide how the Guidelines and Standards are administered and how they may apply to new homes and expansion of existing homes.

Please consult with planning or building officials in your local jurisdiction to find out how the Guidelines and Standards apply to you.

5E. STEP-BY-STEP PROCESS FOR USING THE PERMITTING TOOLS

In Chapter 2 of this User Manual there are several tools to help you prepare for obtaining a permit to build or remodel a home on your streamside property. If you wish, before you go to your local building or planning department, you can follow these seven steps, to start planning your home while preserving the stream and streamside ecosystem:

Step 1: See the List of Exempt Activities below, a-g. If the construction you are planning falls into one of the exempt categories (listed below), no special streamside requirements apply.

List of Exempt Activities

a. Less then 3 cubic yards of earthwork; or,
b. Interior building construction and alterations; or,
c. Erection of storage buildings not greater than 120 sq. ft.; or,
d. Replacement of sewer or water laterals; or,
e. Re-roofing; or,
f. Wood fences six feet and height or less; or,
g. Exterior decks less or equal to 30" above grade.

Interior construction (b), replacement of sewer laterals (d), and reroofing are subject to local building permit requirements. In most jurisdictions minor grading (a), small storage buidings (c), fencing (f) and low decks are not subject to building permits. However, if you do plan on adding a storage shed, a fence or a deck, please consider how to design, site and build them in a manner that causes the least disruption to the stream and streamside resources. Decks should not overhang or extend beyond the creek bank. Fences should also be set back from the top of the bank.

Ask your local building department for information that describes how to build exempt improvements so they cause the least disruption to the stream and streamside ecosystem.

Step 2: Determine whether or not your parcel is defined as a streamside parcel. If any portion of the parcel is within 50 ft. of the top of the streambank on or nearest to your parcel, the answer is 'yes'. See the following sections in Chapter 2 of this User Manual for reference material to help determine if your parcel is defined as a streamside parcel:

- 2D. Designation of Streamside Review Area
- 2E. Definition of a Stream
- 2F. Criteria to Identify or Verify a Watercourse as a Stream
- 2G. Definition of Top of Bank

Step 3: See the list of Streamside Resource Protection Questions for Single-Family Units, Chapter 2, Section I in this User Manual.[1] Answer the questions to the best of your ability. If you need help answering any of the questions, consult with your architect or local building department.

Step 4: See the Information to be Included on Plans for Streamside Development, Chapter 2, Section J in this User Manual. By including the information described, you can create a site plan which integrates the stream and streamside resources into your building plans. The Streamside Resource Protection Questions for Single-Family Units (see Step 3 above) will provide the basis for much of the information you will need to include on the site plan.

Step 5: See the section below titled Slope Stability Protection Area for Single-Family Homes. Determine how the Slope Stability Protection Area needs to be accommodated by your Site Plan. If the top of bank is not easily determined by visual inspection, see Chapter 2, Section G of this User Manual for a detailed description on how to determine the top of the streambank.

5F. SLOPE STABILITY PROTECTION AREA FOR SINGLE-FAMILY HOMES.

The Slope Stability Protection Area is an area between a structure and the stream[2]. The purpose of the Slope Stability Protection Area is to prevent:

1) Problems with slope stability and erosion, and related hazards to structures, public health and safety; 2) Adverse effects on flood control and drainage facilities and related infrastructure; and, 3) Adverse effects on streams and riparian corridors, including stream-dependent vegetation.

The width of the Slope Stability Protection Area will vary depending on the depth of the stream from the top of bank to the bottom, the condition of the stream and the steepness of the bank. Generally, the width of the Slope Stability Protection Area will be between 10-25 ft. from top of bank, but this may be different depending on site and streambank conditions.

Building within the Slope Stability Protection Area is discouraged; however, if your plans include building within that area or if the affected stream is deeply incised or has highly erodable banks, the building department in your community may ask you to hire a licensed expert to conduct a

[1] Your local building department may use this same list of Questions, or may have changed their format by adding them to an existing permit questionnaire. Either way, completing the Questions will help provide information helpful to building on a streamside lot that causes the least disruption to the stream and streamside resources.

[2]. In addition to protecting this area, BMP's should be used that are reflective of Guidelines and Standards, for activities adjacent to this areas where discretionary review is used (i.e redirecting drainage away from the stream and no removal of native riparian plants).

geotechnical analysis of slope stability on your property. The purpose of this analysis is to assure that the building will not be damaged if the stream erodes or fails and that the stream bank will not be damaged by the construction and placement of the structure.

If a new home or remodel requires discretionary review by your local planning department, you will be asked to pay special attention to directing surface drainage away from the stream and possibly take measures to increase the Slope Stability Protection Area to better protect any structures and streams from possible impacts.

Some communities may adopt exemptions to existing single-family homes, which are built on lots 10,000 sq. ft .or less. The exact lot size subject to exemption may vary from community to community. Please consult with building officials in your community to find out how the Slope Stability Requirements may affect your property. See Appendix C to this User Manual for a complete description of the Slope Stability Requirements for Single-Family Units on Streamside Properties.

Step 6: See the Guidelines and Standards for Land Use Near Streams, Chapter 3, Section B of this User Manual. Review the Guidelines and Standards, starting with section I, Riparian Corridor Protection, and proceeding to section XIV, Flood Protection. Consider how you can incorporate the recommendations in the Guidelines and Standards into your single-family home site plan to protect stream and streamside resources. Also refer to the Best Management Practices for Single-Family Homes listed below.

5G. BEST MANAGEMENT PRACTICES FOR SINGLE-FAMILY HOMES

The following Best Management Practices (BMP's) have been developed to support the protection of streamside natural resources on parcels where single-family development is planned. The goals of the BMP's are:

a. To take advantage of the stream and streamside resources on your property by designing and locating improvements to be in harmony with them.
b. To incorporate stream and streamside resources into your development plans in a way that leaves natural stream systems intact.
c. To take opportunity where possible to prevent or address problems, such as bank erosion and/or spreading invasive species, while improving the existing conditions of the stream and/or streamside environment.

The BMP's for single-family homes are:

1. Water Quality:

a. Direct surface drainage away from streams and do not allow water to sheet flow over the stream bank.
b. Encourage infiltration by minimizing paving materials and installing pervious materials such as porous pavement.
c. Use vegetated buffer zones to reduce surface runoff into streams.
d. Plant landscape materials that minimize the use of pesticides and fertilizers. Use organic soil amendments rather than chemical fertilizers.
e. Do not drain pools or spas to the storm drain, gutter or creek. Chlorine and copper algaecides are toxic to aquatic life. Drain to sanitary sewer or let chlorine dissipate for two weeks and drain to landscaping.

f. Dispose of vegetation debris, lawn clippings and animal waste with your household trash. Although biodegradable, too much organic material degrades the riparian habitat.

2. Stream Banks and Streambeds:

a. Preserve existing riparian vegetation.
b. Keep structures out of the stream zone. Stairs and retaining walls can degrade creek banks and impact your neighbor's stream bank.
c. Drain roof gutters to landscaped areas or to the street. Pipes draining onto or overhanging the stream bank cause erosion.
d. Don't dam or take water from the stream.
e. Monitor the stream bank condition. Replant barren or disturbed slopes as soon as possible or provide erosion blanket or straw to protect slope until permanent vegetation is established.
f. Do not use tires or broken concrete for erosion repair or slope protection.
g. Eroded stream banks should be repaired with 'soft' methods, such as geotextiles or soil filled mats or for severely eroded areas boulders interspersed with willow wattles. Seek professional help with this work to ensure proper technique and that there are no impacts to your neighbors.
h. If possible, coordinate with upstream or downstream property owners to design and implement streambed or streambank improvements for a reach of stream.

3. Riparian Vegetation:

a. Plant riparian vegetation to provide shading of streams, where possible.
b. When planting new vegetation in riparian areas:
    1. Use native watershed-specific plants or non-local California natives. See plant lists in Chapter 4- Design Guides.
    2. Exclude invasive plants from your landscaping plan. Refer to the list of invasive plants in Chapter 4- Design Guides
c. Do not place structures within the drip line of mature riparian trees, such as oak, sycamore, alder, etc.
d. New native plantings may need irrigation to help ensure establishment but should be weaned from irrigation for long term survival
e. Remove invasive plants from riparian corridors, especially those which spread rapidly and degrade riparian habitat, such as pampas grass (Cortaderia selloana) and Arundo donax.

4. Fisheries:

a. Preserve in-stream and near-stream riparian vegetation whose canopies provide shade and nutrients for aquatic life.
b. Avoid removing woody debris, which provides fish habitat in streams unless it poses a flooding or erosion threat.

Step 7: See the Construction-related Permit Conditions for Streamside Permits, Chapter 2, Section L of this User Manual, for ways to protect stream and streamside resources during the construction phase of your project.

5H. TECHNICAL ASSISTANCE

When considering how to use the BMP's, especially if you are planning to make improvements to, or reconfigure the stream channel or stream bank, you can call the Community Projects Unit of the Santa Clara Valley Water District:
(408) 265-2607 x 2650 for assistance.

Please consult with planning or building officials in your community to find out how the Guidelines and Standards apply to your site and your project.

5I. RELATED INFORMATION AND PROGRAMS FOR STREAM STEWARDSHIP

There are a variety of programs available to assist homeowners and community groups in promoting stream stewardship. The programs and information listed below are available through the Santa Clara Valley Water District. Other programs are also available through a variety of other agencies.

Stewardship for Small Acreages Workshops

The SCVWD sponsors the Stewardship for Small Acreages program which provides an annual series of educational workshops for landowners on how to attain their property goals while protecting soil, water, plant, animal and other natural resources. The goal is to help reduce pollution entering storm and surface water from residential and agricultural properties by sharing the knowledge and skills necessary to manage land and animals in a way that helps keep water clean. The program targets more than 5000 landowners in the Uvas/Llagas Watershed who own between one and sixty acres of land and is co-sponsored with the Loma Prieta Resource Conservation District and the University of California Cooperative Extension. Specific workshop topics have included: well and septic system maintenance, general storage and disposal issues, landscape design, native plant selection, erosion control, small vineyard nutrient and fertilizer management, composting, fire safety and water conservation.

Watershed Stewardship Grant Program
The SCVWD sponsors the Watershed Stewardship Grant Program to support community-based, non-profit organizations in their watershed stewardship efforts to enhance ecosystem health, water supply, and water quality in Santa Clara County. The program aims to provide community-based, non-profit organizations with the tools and resources to improve ecosystem quality in Santa Clara County and to promote awareness, education, and research related to ecosystem sustainability. Since the program's inception in 2001, more than $300,000 in grant funding has been awarded to community groups.

Adopt-A-Creek and Creek Connections Volunteer Programs
The SCVWD's Adopt-A-Creek and Creek Connections volunteer programs provide the opportunity for community members to have a hands-on experience in improving the condition of local waterways. Adopt-A-Creek is a formalized program that allows schools, businesses or community groups to care for a specific stretch of SCVWD-owned creek for a minimum two year period. The SCVWD provides supplies, such as trash bags, and hauls away the debris collected by volunteers. Hundreds of groups have participated in the program since its inception in 1993. Creek Connections sponsors two countywide creek clean-up in conjunction with California Coastal Cleanup Day and National River Cleanup Day. These events provide an opportunity for spontaneous "drop-in" participation. More than 10,000 volunteers have participated in Creek Connections events since 1996.

School Programs
The SCVWD offers classroom presentations on watersheds, flood plains, run-off, flood protection, creek ecology and clean water. Presentations feature hands-on, interactive activities, including a watershed diorama and bay pollution activity. There are also several original watershed songs that have been incorporated into the curriculum. Many teachers make follow-up field trips to nearby creeks and schools are one of the largest categories of groups participating in the Adopt-A-Creek program. Nearly 20,000 students per year are reached through the school program.

Stream Care Publications and Direct Mail
The SCVWD has several publications and direct mail pieces that focus on the issues of creek care and watershed stewardship including:

Streamcare Guide for Santa Clara County: this twelve page booklet touches on such subjects as healthy streams and watersheds, the living stream, streams in decline, guidelines for stream care, and native plant species. Its first printing included mailed distribution to all of the county's creek side property owners.

Creek Care: this annual mailer to creek side property owners includes general information on responsible behavior around waterways including contacts to report illegal dumping.

Why do people dump their trash in creeks?: this tri-fold brochure takes a broad look at what is dumped in creeks - from lawn clippings to motor oil - and explains the negative effects of the dumping.

Working Around Watercourses: this self-mailer talks about the SCVWD's permit process and the activities that require review and permitting from the district.

CHAPTER 6

GUIDANCE FOR DEVELOPERS

6A. HOW TO PLAN YOUR STREAMSIDE PROJECT

The purpose of this chapter is to help you, as a developer planning a project on streamside land, to anticipate the special needs inherent in planning and building residential, commercial or industrial projects on streamside properties.

6B. THE IMPORTANCE OF PROTECTING AND MANAGING LOCAL STREAMS

The streams and rivers that helped form the picturesque Santa Clara Valley are an integral part of the natural beauty of the region. Early land development in the Santa Clara Valley often maximized lot yield by placing the back fences of individual lots directly onto streambanks. This restricted access to streams, reduced the value of stream-related open space to the community, degraded water quality, damaged streams and streamside resources and limited design options for flood protection measures. Some streams were redesigned to be straight, smooth, and efficient drainage ways, sometimes lined with concrete. These sterile waterways were often hidden from view, and hence became perfect corridors for illegal and disruptive activities. It doesn't have to be this way.

Today, the community's desires for open space and recreational opportunities, state and Federal mandates to protect water quality and endangered fish, such as salmon and steelhead, combined with the Santa Clara Valley Water District's preference for non-structural, natural flood protection methods, create the opportunity for streamside development which both preserves the natural values the public desires and provides the security and privacy residents need.

6C. BENEFITS OF INTEGRATING STREAMS INTO YOUR SITE PLANS

By integrating measures to protect and/or restore streams and streamside natural resources into your development plans, you can create these benefits:

1. Safe Structures: By not building on or next to streambanks the potential for eroding and destabilizing such slopes, impacts to health and safety and related liability are reduced.

2. Safe Slopes: By not building on or next to streambanks the potential for eroding and destabilizing such slopes and related impacts to health and safety are reduced.

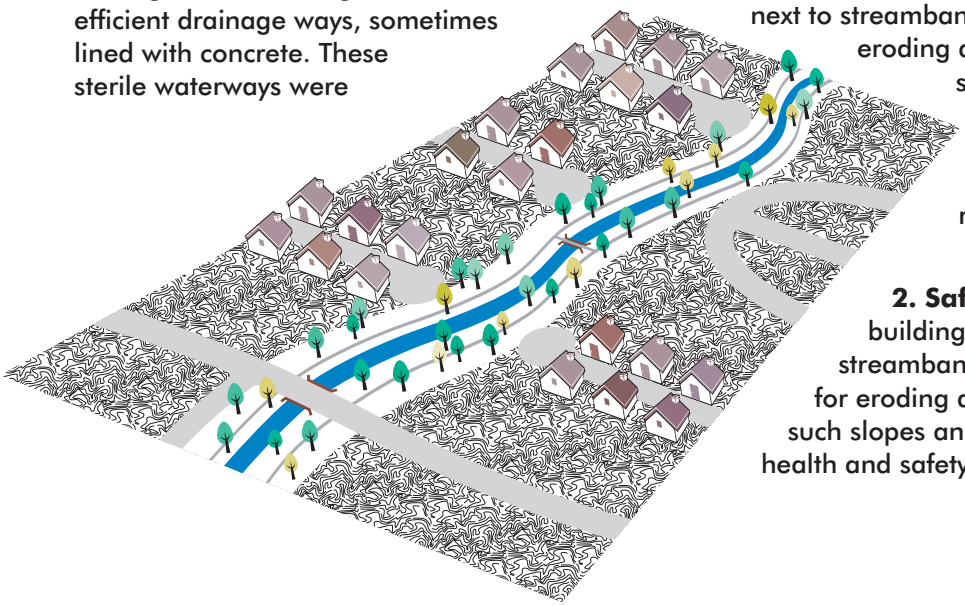

3. **Stream Stability:** By not placing structures between stream banks, and by reducing the amount of pavement and other impervious surfaces adjacent to a stream, including directing drainage from roofs, driveways and patios away from streams, you will be contributing to stream stability.
4. **Open Space and Recreation:** healthy and intact stream ecosystems are a ready-made open space area that can be incorporated in your landscape design and site plan.
5. **Buffers Between Structures:** by preserving and maintaining riparian trees and other vegetation, and siting structures appropriately, you can maintain or create a visual and physical buffer between structures on a site, and between structures on a neighboring site, adding to the privacy and enjoyment of your development.
6. **Proactively Meeting Requirements:** by protecting streams and streamside resources by integrating them into your plans for development, as you follow the Guidelines and Standards for Land Use Near Streams (see below), you will lay the foundation for meeting State or Federal requirements you may encounter when developing streamside lands.

6D. BASE YOUR SITE PLAN ON LOCAL STREAM RESOURCE CONDITIONS

It is very important, given the dynamic and changing nature of streams and stream ecosystems, that each phase of your project and site planning process take into account the special conditions that exist on streamside properties. Your project and site planning process should include measures designed to:

1. **Prevent Damage:** in designing your project, consider how best to protect and prevent damage to sensitive stream resources, and prevent future damage to structures and their occupants.
2. **Address Specific Problems:** if specific problems exist on a site, such as streambed or streambank erosion, a barrier to fish passage, untreated surface drainage flowing directly into a stream or a degraded riparian corridor, your site plan should address each problem with a specific solution.
3. **Anticipate the Needs of Dynamic Stream Systems:** streams are dynamic; they can vary seasonally and from year to year, based on periodic high flows, floods and wet and dry cycles that can occur over a period of years. It is essential that you keep the theme of 'flexibility' in mind when you devise methods of protecting streamside resources or repairing streamside problems. Keep in mind the dynamic nature of stream systems as you plan and carry out your development project.

Please consult with planning or building officials in your community to find out how the Guidelines and Standards apply to your site.

6E. THE GUIDELINES AND STANDARDS FOR LAND USE NEAR STREAMS

The Santa Clara County Water Resources Protection Collaborative, whose members include all of the cities in Santa Clara County, the County, the Santa Clara Valley Water District (SCVWD) as well as environmental, business, agricultural and community organizations, has undertaken a multi-year cooperative process to develop the Guidelines and Standards for Land Use Near Streams, which are listed in Chapter 3 of this User Manual, and the companion Permitting Tools, which are in Chapter 2 of this User Manual.

While each community will decide how and the Guidelines and Standards (G&S's) are administered, each City and the County is expected to require that the G&S's be met when developing streamside properties.

6F. GOALS OF THE GUIDELINES AND STANDARDS AND PERMITTING TOOLS

The Guidelines and Standards and Permitting Tools have been designed to provide:

- Certainty and clarity in development standards: the Guidelines and Standards have been developed so that each local permitting agency will apply them in a similar manner countywide. The actual Guidelines and Standards have been peer reviewed by planning and public works staff to help ensure clarity and consistency.

- Predictability: the Guidelines and Standards are available for you to review and examine, so you can predict how they will likely apply to your proposed project.

- Permit Streamlining: the Guidelines and Standards are designed to fit into each local jurisdiction's existing planning, building and permit systems, to streamline permitting.

- Proactivity: by reviewing the Guidelines and Standards as part of your preapplication process, you can see how they apply to your proposed project, so that by the time you file out a permit application, related requirements of the local permit agency are already integrated into project planning, and eventually, into your site plan.

6G. PROJECT PLANNING TIPS

To facilitate the planning of your proposed project, and the processing of related permits, consider these tips:

• **Start Early:** leave plenty of time to understand the Guidelines and Standards and to develop alternate site plans and development scenarios for project site. Allowing plenty of time for this phase of project planning will bear fruit later in the planning and permit process.

• **Develop a Preliminary Plan:** sketch a simple preliminary site plan, with proposed improvements showing specifically how the Guidelines and Standards will be applied.

• **Answer the Streamside Resource Protection Questions:** if you fill out the Streamside Resource Protection Questions you will quickly gain valuable knowledge to apply to your project and site planning.

• **Contact State and/or Federal Permitting Agencies:** if your proposed development activities include alteration of a stream channel or development next to a stream which contains threatened or endangered fish, such as salmon or steelhead, or similar terrestrial or aquatic life, contact the California Department of Fish and Game, the U.S. Fish and Wildlife Service, etc. See the Resource Agency Referrals for Streamside Development in Chapter 2, Section K of this User Manual for contact information as well as the type of issues in which resource agencies are interested.

STREAMSIDE PERMIT REVIEW PROCESS FLOW CHART

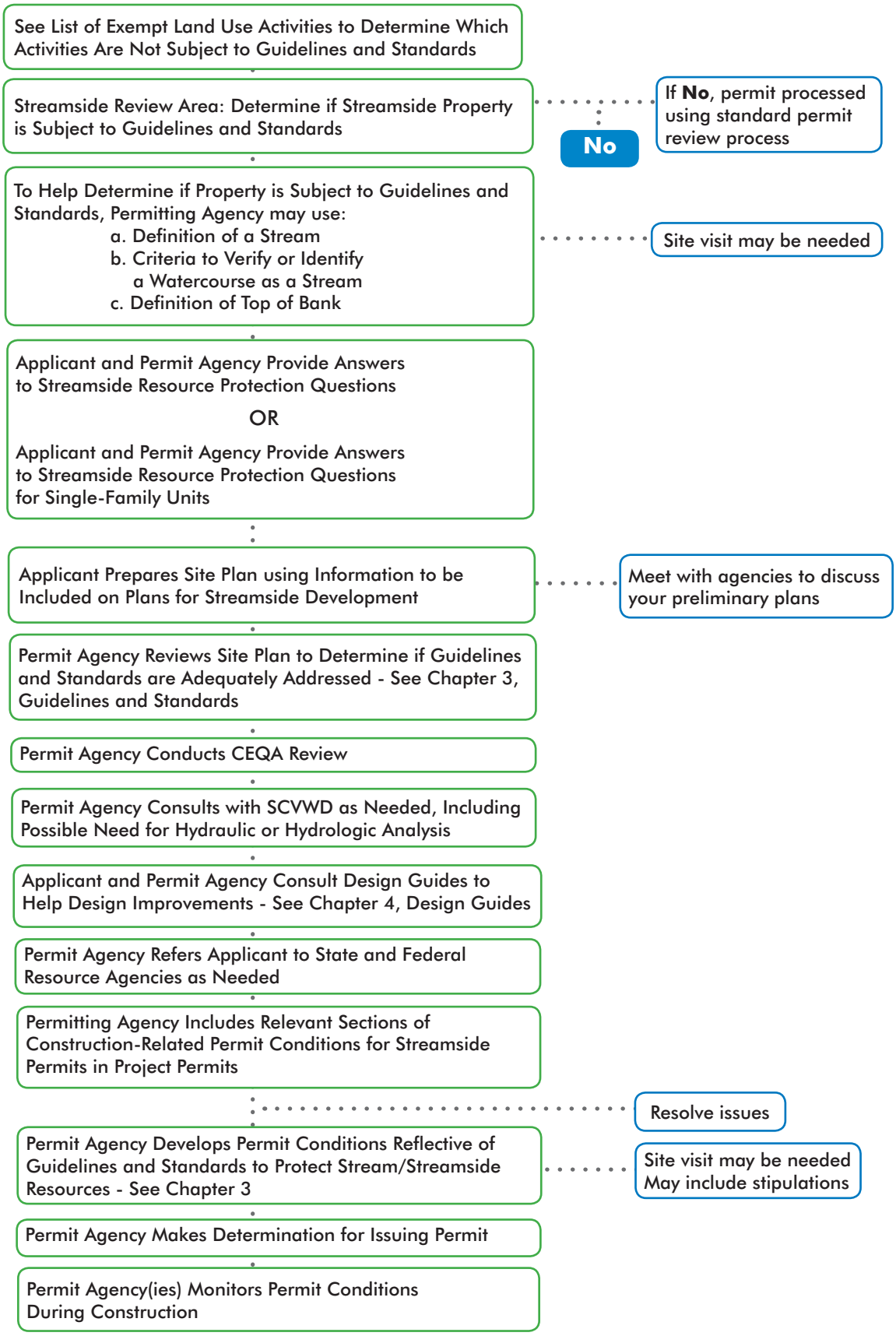

• **Be Flexible:** if your preliminary development plans do not meet the needs of a permitting agency, be creative to find another way to meet these needs.

• **Market Your Success:** by protecting and enhancing local stream and streamside resources by integrating the Guidelines and Standards into your development plans, you will help create greater environmental and community values within your project. Tell potential buyers or tenants of this benefit.

6H. HOW TO USE THE STREAMSIDE PERMITTING TOOLS AND THE GUIDELINES AND STANDARDS FOR LAND USE NEAR STREAMS

Chapter 2 of this User Manual contains all of the Permitting Tools that accompany the Guidelines and Standards. Please review the Flow Chart to get a sense of which Permitting Tools you should use to help you step though the streamside permitting process as easily as possible. The following discussion will take you through the streamside permit application process in a step-wise manner.

Step 1: Land Uses That are Subject to the Guidelines and Standards: the following list of land use activities are exempt from the Guidelines and Standards. All other land use activities are subject to Guidelines and Standards.

List of Exempt Land Use Activities

a. Less then 3 cubic yards of earthwork; or,
b. Interior building construction and alterations; or,
c. Erection of storage buildings not greater than 120 sq. ft;, or,
d. Replacement of sewer or water laterals; or,
e. Re-roofing; or,
f. Wood fences six feet and height or less; or,
g. Exterior decks less or equal to 30" above grade.

Interior construction (b), replacement of sewer laterals (d), and reroofing are subject to local building permit requirements. In most jurisdictions minor grading (a), small storage buidings (c), fencing (f) and low decks are not subject to building permits. However, if you do plan on adding a storage shed, a fence or a deck, please consider how to design, site and build them in a manner that causes the least disruption to the stream and streamside resources. Decks should not overhang or extend beyond the creek bank. Fences should also be set back from the top of the bank.

Step 2: Determine whether or not your parcel is defined as a streamside parcel. If any portion of the parcel is within 50 ft. of the top of the streambank on or nearest to your parcel, the answer is 'yes'. See the following sections in Chapter 2, of this User Manual for reference material to help determine if your parcel is defined as a streamside parcel:

- 2D. Designation of Streamside Review Area
- 2E. Definition of a Stream
- 2F. Criteria to Identify or Verify a Watercourse as a Stream
- 2G. Definition of Top of Bank

Step 3: See the list of Streamside Resource Protection Questions, Chapter 2, Section H in this User Manual.[1] Answer the questions to the best of your ability. If you need help answering any of the questions, consult with your project planner, engineer, architect or local building/planning department.

[1] Your local building department may use this same list of Questions, or may have changed their format by adding them to an existing permit questionnaire. Either way, completing the Questions will help provide information helpful to building on a streamside lot that causes the least disruption to the stream and streamside resources.

Step 4: See the Information to be Included on Plans for Streamside Development, Chapter 2, Section J in this User Manual. By including the information described, you can create a site plan which integrates the stream and streamside resources into your building plans. The Streamside Resource Protection (see Step 3 above) will provide the basis for much of the information you will need to include on the site plan.

Step 5: See the Guidelines and Standards for Land Use Near Streams, Chapter 3, Section B of this User Manual. Review the Guidelines and Standards, starting with section I, Riparian Corridor Protection, and proceeding to section XIV, Flood Protection. Determine how you will incorporate the Guidelines and Standards into your development plans to protect stream and streamside resources.

Model Enhanced Practices
The Santa Clara County Water Resources Protection Collaborative has developed a set of Model Enhanced Practices, which build on the basic Guidelines and Standards. If you want to go beyond the basic Guidelines and Standards and provide additional protection and/or restoration of a stream or related streamside resources, please see the Model Enhanced Practices in Chapter 6 of this User Manual and see how they can be used to add environmental and community benefit to your development.

6I. PERMITS AND GUIDANCE BY STATE AND/OR FEDERAL REGULATORY AGENCIES

Depending on the location of your proposed project and the potential for it to impact natural resources, such as wetlands and protected fish, wildlife or plant resources, you may need to obtain permits from one or more State or Federal agencies, such as the California Department of Fish and Game, the U.S. Army Corps of Engineers, the U.S. Fish and Wildlife Service or the San Francisco Bay Regional Water Quality Control Board. If you need to obtain permits from more than one of these agencies, you may elect to complete a single Joint Aquatic Resources Permit Application (JARPA) which is then reviewed by the relevant State and Federal Permit Agencies. If you think you will need permits from any of these agencies, you should talk to their staff representatives as early as possible in the permit process. Please see Chapter 2 Section K for a referral list to Resource Agencies.

Step 6: See the Construction-related Permit Conditions for Streamside Permits, Chapter 2, Section L of this Users Manual, for ways to protect stream and streamside resources during the construction phase of your project.

6J. PERMITS AND TECHNICAL ASSISTANCE FROM THE SCVWD

If your project is adjacent to a SCVWD facility or right-of-way, or if your local jurisdiction has chosen not to administer streamside permitting, a SCVWD permit is required. Please contact the SCVWD's Community Projects Review Unit at (408) 265-2607, ext. 2650 to find how to obtain a SCVWD permit. Information is also available at: http://www.valleywater.org/Business_Info_and_Permits/Permits/index.shtm

Use of the Santa Clara Valley Water District's (SCVWD) Website for Streamside Information

The SCVWD, in cooperation with the Santa Clara County Water Resources Protection Collaborative, has established a website to support the implementation of the Guidelines and Standards. You may find it useful to use the website to access information, including GIS-based maps of the Santa Clara Valley, to help plan your streamside project. See Chapter 9 of this User Manual for more information about the website and how to access it.

Please consult with planning or building officials in your community to find out how the Guidelines and Standards apply to your site and your project.

6K. STREAMSIDE PLANNING: HOW USING ALTERNATIVE STREET DESIGNS CAN PRESERVE NATURAL STREAMS AND ENHANCE STREAMSIDE DEVELOPMENTS

When there is an interest in having public access to stream-oriented recreation areas, there is also a need to consider the perspective of the adjacent homeowners, in addition to the users of the parks and trails. Through years of working with development planners, the SCVWD has identified three basic street alignment alternatives which can enhance the interface between homes and a linear stream park, trail facility or flood protection channel. These alignments are most effective where the major traffic is on the perimeter of the neighborhood, and residential areas are oriented inward to a central linear park, school, or recreation facility. The following pages describe how the use of alternative street designs can preserve our natural stream and enhance streamside developments.

Housing developments that are designed with the back fences along a stream bank isolate that waterway from the rest of the community instead of integrating it into the neighborhood. Such a design allows the stream to become a detriment to the area, instead of an asset. This type of plan tends to hide the stream from view, restricts access to it, and makes flood protection projects difficult to design.

The Problem

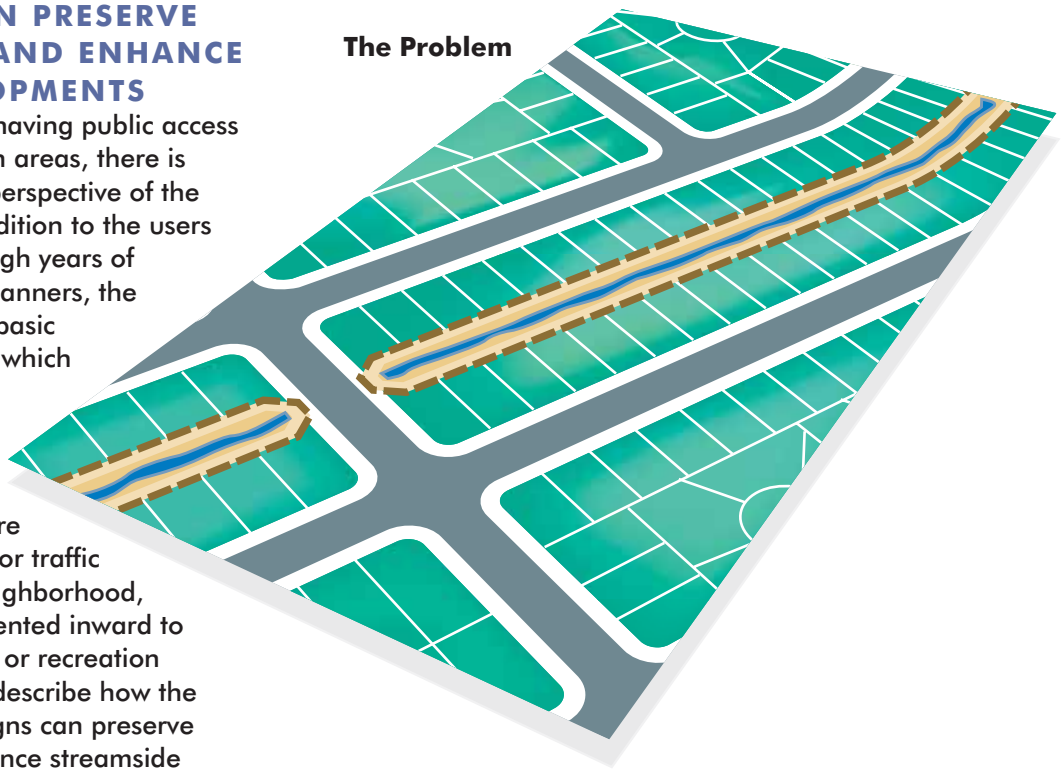

CREEK BETWEEN BACKYARDS

The Solutions

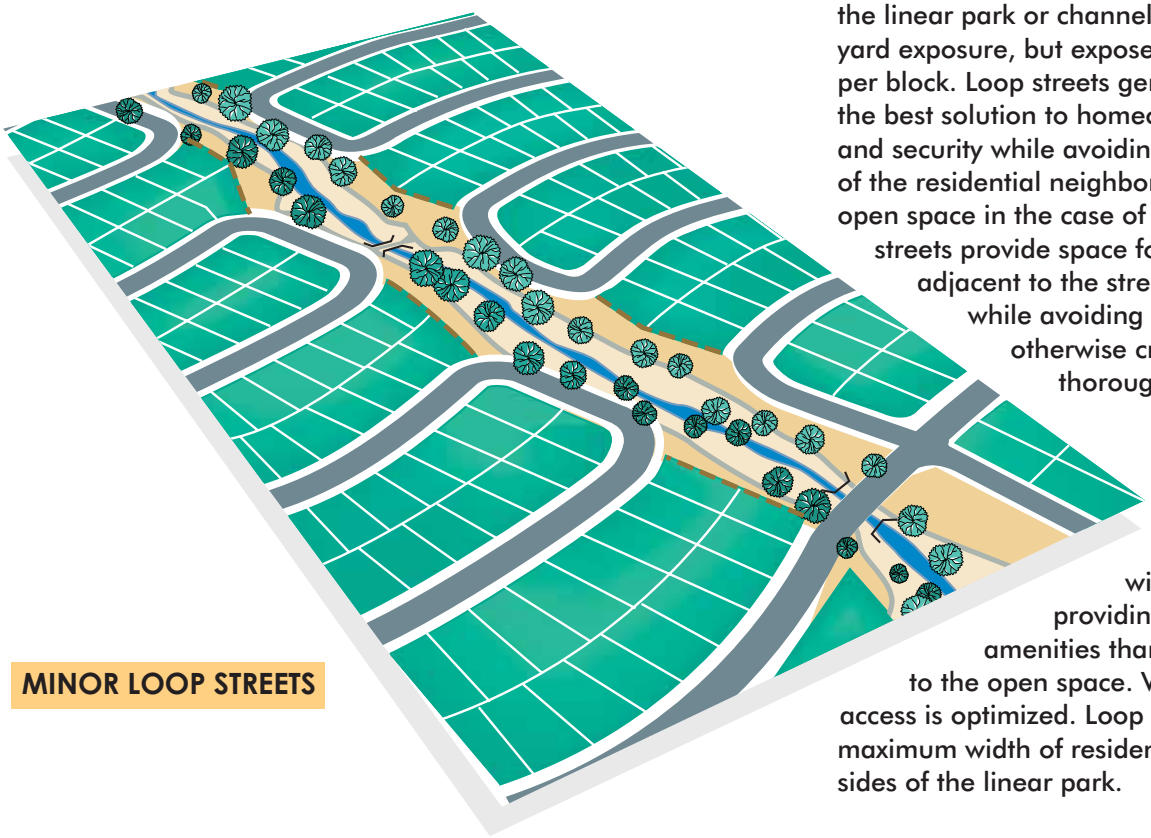

MINOR LOOP STREETS

MINOR LOOP STREETS perpendicular to the linear park or channel eliminate all rear yard exposure, but expose two side yards per block. Loop streets generally provide the best solution to homeowner privacy and security while avoiding a separation of the residential neighborhood from the open space in the case of linear parks. Loop streets provide space for public parking adjacent to the stream park chain while avoiding through-traffic otherwise created by a major thoroughfare.

Loop streets allow a more attractive development with regard to providing open space amenities than streets parallel to the open space. Visual and physical access is optimized. Loop streets also allow maximum width of residential area on both sides of the linear park.

CUL-DE-SACS perpendicular to the linear park or stream also eliminate all rear yard exposure and expose two side yards per block. Homeowners generally prefer cul-de-sacs to loop streets, due to the lower traffic volume.

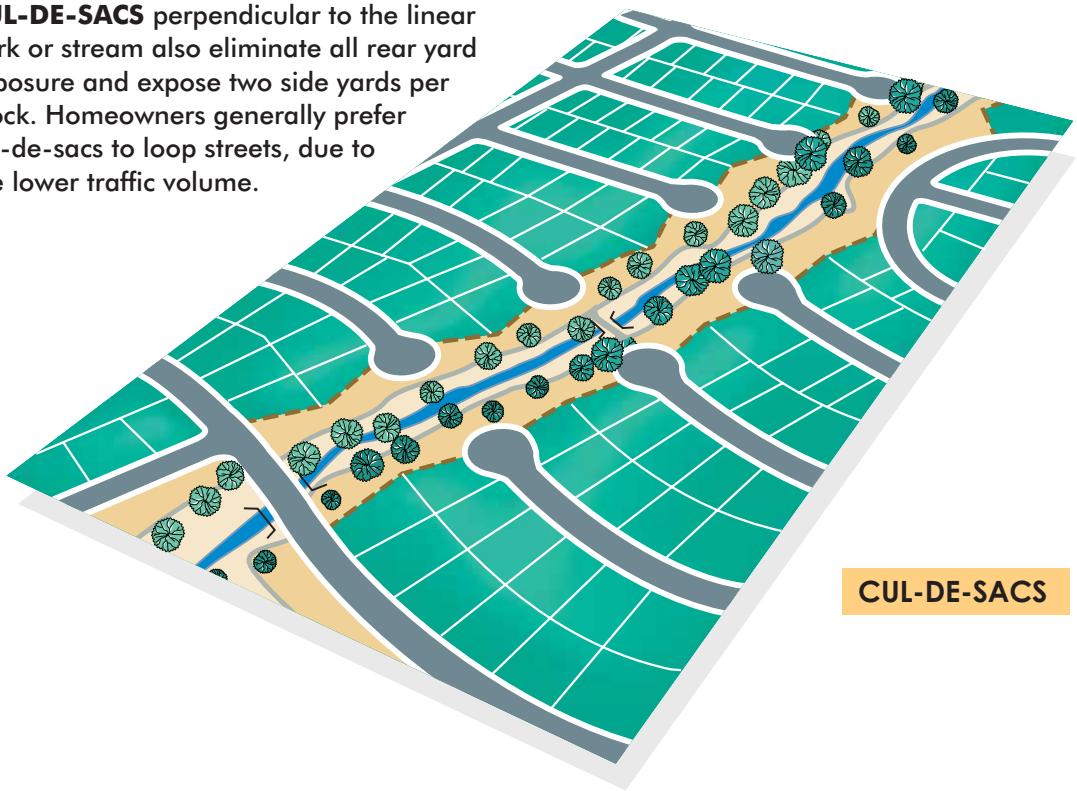

CUL-DE-SACS

The Solutions (continued)

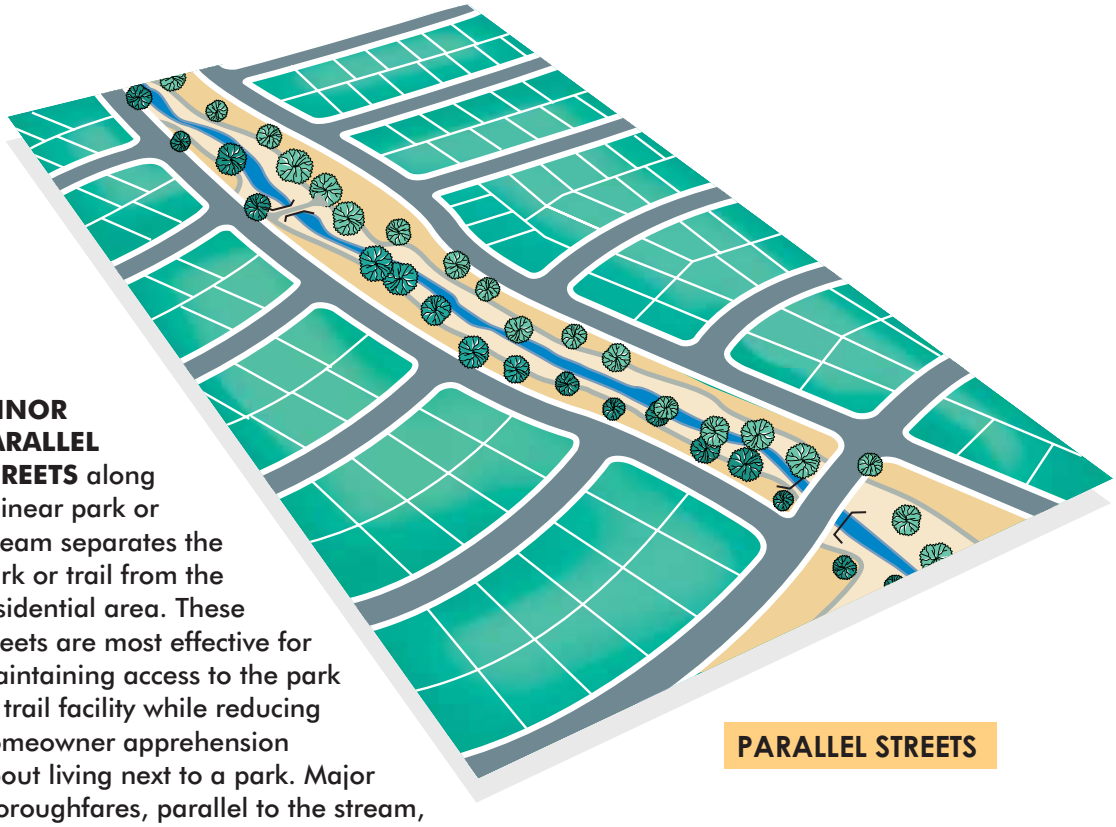

MINOR PARALLEL STREETS along a linear park or stream separates the park or trail from the residential area. These streets are most effective for maintaining access to the park or trail facility while reducing homeowner apprehension about living next to a park. Major thoroughfares, parallel to the stream, tend to isolate the neighborhood from the open space.

CHAPTER 7

MODEL ENHANCED PRACTICES

7A. INTRODUCTION TO THE MODEL ENHANCED PRACTICES

The Guidelines and Standards for Land Use Near Stream (Guidelines and Standards), and the corresponding Permitting Tools are the primary focus of this User Manual. However, as they developed the Guidelines and Standards, the members of the Water Resources Protection Collaborative also developed a list of additional practices, which they have entitled the Model Enhanced Practices.

The Model Enhanced Practices consist of voluntary measures which could be undertaken by streamside property owners, cities, the County, the Santa Clara Valley Water District (SCVWD) and developers to provide substantial additional benefits to streams and stream resources. By their nature, the Model Enhanced Practices are proactive in nature. Some would require concerted cooperation among adjacent property owners or jurisdictions, which cannot be easily accomplished through the permitting process.

The following list of Model Enhanced Practices will be further refined by the Collaborative in 2006, but Practices on the current list can be used and incorporated into streamside development plans to improve local environmental conditions. It is anticipated that sometime in 2006 the SCVWD Board of Directors will consider adopting a set of financial and technical incentives to help encourage use of the Model Enhanced Practices.

There is a wide range of Model Enhanced Practices. Some of the Practices can stand on their own, while others would be more effective if bundled with other Practices. Some Practices involve long-term policy and planning work, while others can be used now, and be integrated into individual development or capital improvement projects. Because some of the Model Enhanced Practices tend to require collaboration among neighbors and agencies, it is anticipated that they will provide the basis for future strategic and coordinated efforts between Collaborative member organizations, as well as property owners and developers.

The Model Enhanced Practices have been grouped into the same activity areas as the Guidelines and Standards. However, within each activity area, the Model Enhanced Practices are further divided into the following five categories:

A. Policy and Planning Work

B. Public Works or Local Capital Improvements

C. Enhanced Land Use Permit Requirements/Guidelines

D. Stream Improvement and Restoration Efforts

E. Outreach and Education

7B. MODEL ENHANCED PRACTICES

I. Riparian Corridor Protection Near Streams and Reservoirs

A. Policy and Planning Work

General Plans

1. Jurisdictions to incorporate stream protection or restoration goals and objectives in General Plans in cooperation with the District.
2. Jurisdictions to incorporate Source Water Protection (SWP) goals/objectives in General Plans in cooperation with the District.

General Planning

1. Jurisdictions to develop a riparian buffer of at least 40 – 150 feet from top of bank or outward dripline of riparian area (whichever is greater).
2. Jurisdictions to develop a riparian protection areas in SWP Zone A (400 ft from reservoir high water line, 200 ft from reservoir tributaries top of bank) and in SWP Zone B (2500 ft from reservoir intakes), and implement measures identified in the District's Source Water Protection Management Guide.

Ordinances

1. Jurisdictions to adopt a comprehensive stream protection ordinance.
2. Jurisdictions to update their local tree protection ordinance to expand the list of protected trees to include riparian species and the recommended planting lists to eliminate non-native invasive species and to promote native species.

B. Public Works or Local Capital Improvements

1. Jurisdiction to consider and implement the watershed stewardship plans when they develop capital improvement plans and evaluate private development proposals.

C. Enhanced Land Use Permit Requirements/Guidelines

1. Plant native vegetation in and near buffer zone to provide more habitat for wildlife and to protect existing habitat from invasive plants.
2. Remove or control non-native invasive plants, where possible, to prevent further propagation and to protect existing riparian resources.
3. Discourage and, where possible, remove other non-native vegetation planting and replace with native riparian vegetation.
4. Take measures to provide in and near-stream riparian vegetation whose canopies provide shade and nutrients for aquatic life.
5. Take measures to create stream characteristics suitable for fish habitat, including riffles, pools, gravel beds, overhanging vegetation & woody debris.
6. Remove barriers to fish passage, including dams where possible.

E. Outreach and Education

1. Improve education efforts in the county to discourage property owner from buying/planting invasive species and plant retailers/wholesalers from selling them. Where possible, coordinate with other efforts to educate retailers.

2. Local jurisdiction to work with SCVWD to implement a program to remove invasive species from watersheds

II. Bank Stability/Streambed Conditions

A. Policy and Planning Work

1. Identify reaches of stream that possess sensitive or riparian habitat values, based on Water District maps or other sources; develop measures to protect such areas. Incorporate this information into District-sponsored internet-based GIS/ information system.

2. Consider decreasing the front yard setback on a specific property in order to accommodate greater setback from the stream in the back/ side.

B. Public Works or Local Capital Improvements

1. Inform and/or pursue right of way dedications or offers of dedication for flood protection purposes from the property owner and trigger early consultation with District. [District will provide criteria to assist Jurisdictions]

2. Consider future District flood protection needs when zoning land or allowing structures near streams. [District to provide input to Jurisdictions through early consultation.]

C. Enhanced Land Use Permit Requirements/Guidelines

1. Reduce over bank surface runoff from existing yards, commercial and industrial facilities, maintenance roads, and planned developments.

2. Restore meanders and natural stream processes, where possible, including modifying dams, weirs, erosion control measures and water diversions;

3. Reestablish or create floodplain terraces, where possible, to improve flood protection, channel form and environmental values

4. Consider and incorporate, where possible, future District flood protection needs when zoning land or allowing structures near streams. (District will provide input to Jurisdictions through early consultation.)

5. Provide a 20-foot setback in addition to the slope stability setback for maintenance access.

6. For levee sections, recommend a 50 to 100 foot setback from outboard toe of levee to allow for future increases to a channel cross-section, relieve stress on the channel, allow opportunity for future flood protection design and create environmental value.

E. Outreach and Education

1. Develop a program working with residents, cities, and the District to properly remove and discourage non-native vegetation planting and reintroduce native riparian vegetation.

III. Encroachments between the Top of Bank

B. Public Works or Local Capital Improvements

1. No dewatering of natural waterways to construct project.
2. As part of developments, require replacement, removal or reconstruction of bridges/structures that are not clear span, have piers/structures in the active channel, or are substandard (e.g., tree houses or patio decks).
3. Require that new construction/replacement be constructed with adequate freeboard to accommodate future widening of the bridge.
4. Require that new construction/replacement be constructed with the abutments far enough apart to accommodate floodplain widening for flood protection projects
5. If feasible, provide minimum 15 feet clearance under bridge for creeks wider than 50 feet.

D. Stream Improvement and Restoration

1. Identify and require removal of existing permitted overhanging structures, which cause public health and safely problems and/or damage to stream resources.
2. Illegal water diversions will be identified and removed as appropriate.
3. Establish a plan and date for the removal of all illegal in-stream dams. For legal dams, ensure there is fish passage and sufficient flows around any such dams.

IV. Erosion Prevention and Repair

D. Stream Improvement and Restoration

1. When undertaking erosion control, coordinate erosion design and repairs with upstream and downstream property owners/District.
2. Property owners of streamside parcels should identify existing erosion problems in the initial stages before such problems create a significant hazard. Once identified, property owner should take proactive measures to resolve such problems using "soft" erosion control measures where possible.

V. Grading

C. Enhanced Land Use Permit Requirements/Guidelines

1. Prepare a SWPPP for any grading exceeding 3 cubic yards within 100 feet of top of bank.
2. Provide BMPs, standards, and specifications for erosion control for all earth disturbing activities.

VI. Outfalls, Pump Stations and Site Drainage

B. Public Works or Local Capital Improvements

1. Jurisdictions will update their storm drain master plans to take into account stream stability and ecology.
2. Retrofit or install filters in existing drainage system to reduce pollutants and include a maintenance plan for cleaning or replacing filters.
3. Install Monitoring Wells near infiltration basins (consult with District).

4. Pretreat stormwater from pump stations prior to discharging to creeks or infiltration basins (retrofitting of existing systems is encouraged).
5. Jurisdictions to place operational controls on private stormwater pumps consistent with the standard.

C. Enhanced Land Use Permit Requirements/Guidelines

1. Consider stream stability impacts for new outfalls (if available, utilize District's Hydrologic Modification Plan for guidance).
2. Flap gates are to be installed in manhole structure adjacent to stream.
3. Outfall should be at least 2 feet above the stream bottom.

D. Stream Improvement and Restoration

1. Redirect drainage to the original watershed if a proposed development already has drainage crossing watershed boundaries.
2. Eliminate or modify existing outfalls that cause erosion.
3. Identify stream reaches and/or outfalls where trash is a problem and install trash collectors at outfalls where feasible and include a maintenance plan for removal of trash from collectors.

VII. Channelization

A. Policy and Planning Work

1. Local jurisdictions to use updates to existing planning documents, such as General Plans, Specific Plans and other relevant mechanisms, as an opportunity to incorporate information from other efforts about which stream reaches that have been channelized, hardened or improperly modified should be prioritized for restoration.

C. Enhanced Land Use Permit Requirements/Guidelines

1. Require developments to daylight buried creeks unless otherwise required by a Specific Area Plan.
2. Construct road crossings using a clear-span design that avoids impacts to the channel bed and banks. Exceptions (e.g., box culverts, pipes) will only be considered once the applicant has proven that a clear-span design is not possible.

VIII. Utility Encroachments

C. Enhanced Land Use Permit Requirements/Guidelines

1. Aerial utility crossing will not be placed over sensitive biological resources or vegetation mitigation areas.

IX. Trail Construction

B. Public Works or Local Capital Improvements

1. Incorporate Water Quality BMP's in design of trails (refer to SJSU Trail Standard Details and Specifications)

X. Septic Systems

B. Public Works or Local Capital Improvements

1. Jurisdictions shall develop and implement Septic Management Plans (includes denitrification of existing systems).

C. Enhanced Land Use Permit Requirements/Guidelines

1. Consider alternative sewage management systems
2. Remove existing septic and connect to alternative or municipal systems.

E. Education and Outreach

1. Provide an education program by County Department of Environmental Health (DEH).

XI. Trash Control and Removal

D. Stream Improvement and Restoration

1. Proactively organize communities to implement measures to eliminate and remove trash.
2. Conduct focused efforts to identify and prevent trash production.
3. Install trash collectors at outfalls/ develop plan for removal of trash from collectors.

XIII. Recycled Water

B. Public Works or Local Capital Improvements

1. New developments should be double plumbed to allow for use of recycled water, where appropriate.
2. New/existing buildings or high water uses to connect to recycled water, where appropriate.

XIV. Flood Protection

B. Public Works or Local Capital Improvements

1. Jurisdictions will have at least one Certified Floodplain Manager on staff working with FEMA requirements.
2. Jurisdictions will obtain a Community Rating System score of greater than 8 (http://www.fema.gov/nfip/crs.htm)

C. Enhanced Land Use Permit Requirements/Guidelines

1. For development within special flood hazard zones A, AE, AH, AO, design project to allow for the passage and storage of floodwater within the site and construct the lowest floor to be a minimum of 1 to 2 feet above the 1 percent water surface elevation.
2. In Zone X (areas less than 1 foot of flooding), recommend that the lowest floor and highest adjacent grade be 1 to 2 feet above the existing ground.
3. In zone A (areas where base flood elevations have not been determined) request that a hydraulic analysis be completed to determine the base flood elevation

D. Stream Improvement and Restoration

1. Encourage or provide incentives for private property owners to decrease storm runoff from their properties.

XV. Stream Restoration Activities

A. Policy and Planning Work

1. Local jurisdictions in conjunction with SCVWD to conduct an inventory of all or key stream in the jurisdiction (similar to San Jose's Riparian Corridor Inventory), to identify which streams and/or stream reaches have the most stream restoration potential.

2. Use inventory to prioritize and conduct restoration activities.

D. Stream Improvement and Restoration

1. Encourage property owners to cooperate among themselves to identify and restore stretches of stream by providing guidance on how to do creek restorations, navigate the regulatory process, ensure that the restoration activities are compatible with the overall goals for the entire creek, and apply for grant funding, where available.

2. In places where SCVWD has easement or right of way along certain stream reaches next to private property owners, SCVWD to work in concert with adjacent landowners to identify and conduct restoration and/or other environmental enhancements.

XVI. Stream Monitoring

A. Policy and Planning Work

1. Provide field team support to the District's Hydrogeomorphic Monitoring Effort to determine designs for improving creek stability and ecology.

XVII. Stream Education

D. Stream Improvement and Restoration

1. For creeks where SCVWD has prepared analyses of the creek segment cross sections needed for stable stream, distribute literature to streamside property owners showing how the desirable cross section for their creek segment can be designed as a property amenity and address stability/ecological issues on a site specific basis.

2. Distribute literature to streamside property owners showing listings of desirable and undesirable plants with examples of creek-friendly landscape designs.

3. City/County/District to participate and support watershed council stakeholder processes to enhance community stream awareness and develop stream protection/ restoration projects.

CHAPTER 8

SCVWD ORDINANCE 83-2

8A. INTRODUCTION AND BACKGROUND

Santa Clara Valley Water District was created by an act of the California State Legislature which is identified as the Santa Clara Valley Water District Act (SCVWD Act).

The SCVWD Act identifies the District's purpose and authority. These purposes are:

- to protect Santa Clara County from flood and storm water;
- to provide comprehensive conservation and management of flood, storm and recycled waters for all beneficial uses;
- to increase and prevent the waste of the water supply in the District
- to enhance, protect and restore stream, riparian corridors, and natural resources in connection with other purposes of water supply and flood protection;

The mission of the District is a healthy, safe, and enhanced quality of living in Santa Clara County through watershed stewardship and comprehensive management of water resources in a practical, cost effective and environmentally sensitive manner.

8B. SANTA CLARA VALLEY WATER DISTRICT ORDINANCE 83-2

The SCVWD enacts ordinances to carry out its mission. The first ordinance (Ordinance 59-1), which required a permit for construction activities near a stream, was adopted in 1960. This ordinance was revised in 1974 and again in 1983 (Ordinance 83-2).

The intent of this ordinance is to secure the health, safety and welfare of people by facilitating prudent floodplain management, protecting water quality, securing maintenance of watercourses and prohibiting injury to District property and facilities. The Ordinance also defines the District's permitting jurisdiction on streams and describes the requirements and procedure to obtain a permit for construction or encroachment activities on a stream.

8C. SCVWD PERMIT REQUIREMENTS

The District's jurisdiction on a watercourse begins at a point where the upstream watershed area is 320 acres (one-half square mile).

The District currently requires construction/encroachment permits for:

- Construction of structures or grading within a floodway, between the banks of a watercourse, within 50 feet of top of bank, on a levee or on a District project
- Excavation or deposition of any material within a floodway, between the banks of a watercourse, on a levee or on a District project
- Construction of any outlet for discharging drainage waters within a floodway, within the banks of a watercourse or a District project
- Planting of any form of flora upon or within the banks of a watercourse
- Trespassing on District property or exclusive easements except where such areas have been opened and developed for public use

Factors Considered in Review of Projects

The factors currently considered in the review of a project adjacent to a District facility are those that directly impact the facility. The District may investigate factors such as whether the proposed work will:

- Impede, restrict, retard, pollute or change the direction of the flow of water
- Catch or collect debris carried by such water;
- Be located where natural flow of the storm and flood waters will damage or carry any structure or any part thereof downstream;
- Damage, weaken, erode, or reduce the effectiveness of the banks to withhold storm and flood waters;
- Resist erosion and siltation and prevent entry of pollutants and contaminants into water supply;
- Interfere with maintenance responsibility or with structures placed or erected for flood protection, water conservation, or distribution.

Other Elements of 83-2

The ordinance places prohibitions on the pollution of water supplies whether in stream, reservoirs, groundwater or conduits. Also, the ordinance establishes the responsibility of a property owner to maintain the stream as it flows through his/her property and establishes some criteria for the District in its role and responsibility for flood control.

8D. SCVWD PERMIT PROCESS

SCVWD currently uses the following procedures when it reviews and issues permits:

1. Preliminary project consultation is preferred and can occur at any time.
2. Provide engineered improvement plans or other project drawings and description of the activity to be performed.
3. Provide a cover letter requesting a permit and providing a project explanation, any time constraints and contact information.
4. Allow 3 to 4 weeks review time.
5. There is no cost for the permit.

8E. REVISION OF ORDINANCE 83-2

It is anticipated that SCVWD will be initiating a revision to Ordinance 83-2 in the fall of 2005. The goal is to incorporate the Proposed Guidelines and Standards for Land Use Near Stream and related permitting tools to ensure a clear, consistent approach to streamside permitting throughout the County.

8F. TEXT OF ORDINANCE 83-2

The text of the SCVWD Act and Ordinance 83-2 are available on the SCVWD's website www.valleywater.org/About_Us/index.shtm and www.valleywater.org/Business_Info_and_Permits/index.shtm respectively.

The SCVWD Act text:
www.valleywater.org/About_Us/index.shtm

Ordinance 83-2 text:
www.valleywater.org/Business_Info_and_Permits/index.shtm

ORDINANCE NO. 83-2

AN ORDINANCE OF SANTA CLARA VALLEY WATER DISTRICT DEFINING LIMITS OF FLOOD CONTROL RESPONSIBILITY; PROVIDING FOR MAINTENANCE OF WATERCOURSES; FOR JOINT USE OF PROJECTS, AND FOR DEDICATIONS; PROHIBITING POLLUTION OF DISTRICT WATER SUPPLIES AND INJURY TO DISTRICT PROJECTS, AS DEFINED, AND ENCROACHMENT UPON OR INTERFERENCE WITH WATERCOURSES EXCEPT BY PERMIT; PROVIDING PENALTIES FOR VIOLATION HEREOF; AND REPEALING ORDINANCE 74-1

The Board of Directors of Santa Clara Valley Water District do ordain as follows:

SECTION 1

INTENT

It is the intent of this Ordinance to secure the health, safety and welfare of the people of the District by prudent floodplain management, by protecting the quality of District water supplies, and by securing maintenance of watercourses and prohibiting injury to District property and projects and harmful amendment of watercourses.

It is further the intent of this Ordinance to provide a definition of the general limits of watercourses on which the District may request rights of way for flood control purposes and construction of flood control facilities.

It is further the intent of this Ordinance to insure that the repeal of Ordinance 74-1, accomplished hereby, shall not affect permits heretofore given and rights of every nature heretofore established pursuant to said Ordinance 74-1.

SECTION 2

DEFINITIONS

2.1 ``Bank or Banks of a Watercourse'' means the sides of a watercourse the top of which shall be the topographic line roughly parallel to stream center line where the side slopes intersect the plane of ground traversed by the watercourse. Where banks do not distinguishably end, the surrounding country being extensions of the banks, the top of such banks shall be as determined by the District.

2.2 ``Board'' means the Board of Directors of the Santa Clara Valley Water District.

2.3 ``Design Flood'' means the selected flood against which protection is provided, or eventually will be provided, by means of flood protective or control works.

2.4 ``Designated Floodway'' means the channel of a stream and that portion of the adjoining floodplain required to reasonably provide for passage of the design flood.

2.5 ``District'' means Santa Clara Valley Water District.

2.6 ``District Project'' means any facility, structure or improvement of the District including, without limitation, lands, facilities, structures or improvements and appurtenances thereto owned or controlled by the District for water conservation, water utility, flood control or any lawful District purpose.

2.7 ``Levee'' means an elongated embankment constructed where required to contain flooding.

2.8 ``Pollution'' means impairment of water quality to a degree which adversely and unreasonably affects a beneficial use of the water.

2.9 ``Structure'' means anything made or constructed and having its foundation or support upon or within the ground.

2.10``Watercourse'' means an elongated channel or depression, whether natural or man-made, in which water does or may flow and may include the overflow area, if any, of such channel or depression. For the purposes of this Ordinance ``watercourse'' includes such channels or depressions, although the same may be by reason of size of area drained not deemed to be a flood control facility.

SECTION 3
MAINTENANCE BY OWNER

Every owner of a watercourse whether a person, firm, corporation, or governmental agency, or such owner's lessee or tenant, shall keep and maintain the same in a condition which will not contribute to pollution as prohibited by Section 6.1 hereof and which will not unreasonably change or retard the flow of the water; and every owner of a structure within or directly affecting a watercourse shall maintain the safe condition and function of the same.

SECTION 4
DISCHARGE OF DRAINAGE

The County of Santa Clara, any municipality and any agency or person within the District shall have the right to discharge drainage water of non-polluting quality directly into watercourses, except water supply canals and percolation facilities, of the District subject only to the approval procedure set forth in this Ordinance.

SECTION 5
FLOOD CONTROL RESPONSIBILITY

5.1 The responsibility of this District for the control of flood and storm water is an obligation to make efficient use of its funds in the areas of study, planning and acquisition and to act lawfully in designing, constructing and maintaining such works as the Board shall approve. The responsibility of the District does not and cannot extend to an affirmative obligation to take specific measures of any nature not mandated by governing legislation or judicial order. This Ordinance may not be deemed an imposition of a duty upon the District other than as specified above and no assertion of public liability shall be based thereon. Nothing in this Ordinance shall be deemed to be or construed as a warranty or assurance that flooding and flood damage will not or cannot occur anywhere in the District. However, the District will provide flood control service in an emergency to the extent of its resources and ability. The District accepts an obligation to design, construct and maintain its works in such manner as to avoid or minimize harmful disturbance of the natural environment.

5.2 Construction and maintenance, or acceptance and maintenance, of flood control works and control of flood and storm waters by the District shall be subject to the following:

A. The District will so act in a reach or portion of a watercourse only if it has sufficient legal title or right of way therein.

B. Artificial channels of any kind, regardless of the size of tributary watershed, are excluded from District responsibility unless the same are constructed by the District or are approved and adopted by the Board.

C. A reach or portion of a natural watercourse will not be deemed within District flood control jurisdiction unless the tributary watershed area upstream of such reach or portion is in excess of 320 acres (one-half square mile); provided, that such area may be either greater or less than 320 acres pursuant to agreement with the city or county having jurisdiction.

5.3 A watercourse or reach or portion thereof over which the District is not deemed to have flood control jurisdiction by reason of the exclusions specified in Subparagraphs B and C of Section 5.2 above is deemed a local drainage facility.

5.4 Flood control facilities serving a watershed area of 320 acres (one-half square mile or more) shall have a design capacity to safely convey the one percent flood (``100-year flood'') plus freeboard. The standard, however, may be lowered to be consistent with land use designations of city or county land use master plans. Freeboard design criteria shall be established by the District based upon accepted engineering practices.

5.5 Storm water drainage facilities serving a watershed area less than 320 acres (one-half square mile) and qualifying under agreement per paragraph 5.2c shall have a design capacity to convey the ten percent flood (``10-year flood'') plus freeboard. Freeboard design criteria water drainage facilities referred to in this section are the major collectors and are not deemed to include storm sewers used to drain urban developed sites.
The design of storm sewers rests with the local agency having jurisdiction of the urban development served. In drainage areas less than 320 acres, where urban development exists or may occur, the drainage facilities should be designed to provide for the conveyance or detention of the flood flows in excess of the ten percent flood up to the one percent flood in the streets or open space areas so that development is not subject to flooding by such excess flood flows. Otherwise, the structures must be flood-proofed, as prescribed by Federal Emergency Management Agency regulations, or the storm water drainage facility must be designed as provided in Section 5.4 above.

SECTION 6
PROHIBITIONS

6.1 The pollution of the water supplies of the District, whether in surface streams, reservoirs or conduits of any kind, or of groundwater, by any direct or indirect means whatever, including the deposit of polluting matter of any kind upon the banks of a watercourse, lake or reservoir where the same may reach or affect such water supplies, and including the discharge of polluting storm waters or sanitary sewage, is prohibited.

6.2 Without having first secured a permit pursuant to Section 7 hereof, or other written approval from the District, it shall be unlawful after the effective date of this Ordinance for any person, firm, corporation, the County of Santa Clara, the Government of the United States and agencies thereof, the Government of the State of California and agencies thereof, or any municipal corporation or district to do or cause to be done any of the following:

A. Construct or place any structure or perform any grading within a designated floodway between the banks of a watercourse, or within 50 feet of the top of such banks.
B. Construct, place or maintain any structure or perform any grading upon a levee or on a District project.
C. Excavate within a designated floodway, upon a levee, or upon or between the banks of a watercourse, or District project.
D. Deposit material of any kind within a designated floodway, upon a levee, or District project, or upon or within the banks of a watercourse.
E. Construct or place any outlet for discharging drainage waters within a designated floodway, upon or within the banks of a watercourse, or District project.
F. Plant any form of flora upon or within the banks of a watercourse or a District project.
G. Trespass in any manner whatsoever including the driving of vehicles on any property in which the District owns a fee simple interest or on which the District owns an exclusive easement for flood control, drainage or water conservation or distribution purposes, except such areas as have been opened to and developed for public recreational or other use.

6.3 Permits shall not be withheld upon unreasonable or insubstantial grounds.

SECTION 7
PERMIT PROCEDURE

7.1 Any person, firm, corporation or public agency, except those filing maps pursuant to the State Subdivision Map Act or local ordinances adopted pursuant thereto, desiring to do any of the acts for which a permit is required pursuant to this Ordinance shall make application for such permit to the District. Said applications shall contain such information as the District shall reasonably require.

7.2 Any public agency, or any person, firm or corporation filing a map pursuant to the State Subdivision Map Act or local ordinance adopted pursuant thereto, desiring to do any of the acts for which a permit is required pursuant to this Ordinance shall, in lieu of the application procedure set forth above, submit engineered improvement plans to the District.

7.3 Upon receipt of such application for permit or engineered improvement plans or additional information as herein set forth, the District shall make such investigations as are necessary to determine, among other things, whether or not the proposed work or activities intended will impede, restrict, retard, pollute, change the direction of the flow of water, catch or collect debris carried by such water; is located where natural flow of the storm and flood waters will damage or carry any structure or any part thereof downstream; or will damage, weaken, erode, or reduce the effectiveness of the banks to withhold storm and flood waters, to resist erosion and siltation and entry of pollutants and contaminants, or interfere with maintenance responsibility or with structures placed or erected for flood control, water conservation or distribution. In order to make said investigation, the District may return said application or improvement plans to the applicant for additional information as may be required to complete the investigation. After investigation the District shall approve conditionally, or disapprove the application or improvement plans on the basis of such investigations. If a permit is granted, it shall state the conditions subject to which it is granted.

7.4 Within fifteen (15) days of District receipt of such application for permit or engineered improvement plans or additional information, the District shall respond, acknowledging the same and advising the applicant of any reason beyond the District's control why action thereon cannot be taken within thirty (30) days of said District receipt. Where no such notification of anticipated delay and the reason therefor is given by the District, the District shall act upon every application for permit, or engineered improvement plans or additional information within thirty (30) days of its receipt.

7.5 In the event an applicant is aggrieved by the action of the District, or by reason of the requirements of this Ordinance, the applicant may within fifteen (15) days from date of decision of the District, make an appeal in writing to the Board. The Clerk of said Board shall set a time for hearing on such appeal within three (3) weeks from the date of receipt of said appeal, and shall mail or deliver notification to the appellant of said date at least two (2) weeks prior to the date so set. The appellant may waive such notification and seek a hearing at the next meeting of the Board. At the hearing of such appeal, it will be incumbent upon the appellant to show to the satisfaction of the Board that the work or activities so proposed will not violate Section 7.3 of this Ordinance.

SECTION 8
JOINT USE

The use of District projects jointly with a public agency, subject to conditions established by resolution of the Board, is favored wherever such joint use is possible and conformable to the District's public duty.

SECTION 9
REQUEST FOR DEDICATIONS AND CONSTRUCTION

In order to permit the provision of flood control services by the District, the District will request, wherever equitable and appropriate, that the city or the county having jurisdiction secure flood control dedications to the District from landowners seeking a change of land use. Where equitable and appropriate, the District may also request that the city or the county having jurisdiction secure from such landowners construction of flood control measures as determined by the District. Such requests shall be pursuant to and in accordance with the master plans, ordinances, resolutions, procedures and conditions established by such city or county.

SECTION 10
VALIDITY

Should any Section or provision of this Ordinance be found to be unconstitutional or invalid, such decision shall not affect the validity of the Ordinance as a whole or any part thereof, other than the part decided to be unconstitutional or invalid.

SECTION 11
ORDINANCE 74-1 REPEALED

Ordinance 74-1 of this District is hereby repealed; provided that permits heretofore given and rights of every nature heretofore acquired under said Ordinance 74-1 shall remain unaffected.

CHAPTER 9

GIS MAPPING TOOL TO SUPPORT WATER RESOURCE PROTECTION

9.A. INTRODUCTION TO THE GIS MAPPING TOOL

The objective of the GIS Mapping Tool is to help protect water resources in Santa Clara County by making water resource related information available to local land use agencies, developers, private property owners, and the general public. The GIS Mapping Tool is now available for all parcels throughout the County and offers the following functions:

- Provides a "Trigger" to identify streamside properties and related water resource protection issues.

- Facilitates the review of streamside properties by providing a direct link from the visual parcel information to the Guidelines and Standards.

- Provides disclosure to the public/business community regarding streamside issues.

It is anticipated that during the Sept. 2005 - Feb. 2007 period, the GIS Mapping Tool website will be expanded to include links to educational materials and permit-related documents associated with the application of the Proposed Guidelines and Standards for Land Use Near Streams.

WHO CAN BENEFIT FROM THE GIS MAPPPING TOOL

The Mapping Tool is a particularly valuable resource to local jurisdiction staff as it will help flag potential issues for staff to take into consideration in reviewing permit applications. The Mapping Tool is also intended to provide detailed information early on in the permitting process to the development community as to which Guidelines and Standards may be required for a specific project. Finally, the Mapping Tool is also intended to provide private property owners and streamside residents with water resource information pertaining to their specific property.

HOW TO ACCESS THE GIS MAPPING TOOL

Accessing the Mapping Tool is easy! Just go to the following website:

http://arcview.valleywater.org/WRPC

When prompted for the User Name and Password information, just type in "WRPC" in both cases. If you have any problems accessing the website, please call (408) 265-2607, ext. 2576.

To access the Mapping Tool:
http://arcview.valleywater.org/WRPC

9.B. INSTRUCTIONS ON HOW TO USE THE MAPPING TOOL

The following set of instructions is intended to provide guidance as you start using the GIS Mapping Tool. The instructions include a pictorial representation of default screen you will find when you first log in along with the names of the different visual elements on the screen. The instructions also include a brief description of the different functions available in the toolbar as well as information on related to Layer Visibility and making a Layer Active. If you have any questions on how to use these instructions, please call the Santa Clara Valley Water District at (408) 265-2607, ext. 2576

Logging In

To connect to the SCVWD GIS Mapping Tool, go to http://arcview.valleywater.org/WRPC/index.html. Login using the following:

- **Username: WRPC**
- **Password: WRPC**

Mapping Tool Components

The location of the four components described below are indicated on the map above with the numbers 1-4 highlighted in red.

1. Map Window: Displays the map image, which will include information on any active layers.

2. Layer List/Legend: Displays either a list of layers or a Map Legend for the layers. Toggle using the "Layers/Legend" tool button to switch between the two.

3. Toolbar: Displays currently selected tool and tool buttons for manipulating the map and performing queries, printing, etc.

4. Overview Map Window: Displays a county scale map showing extent of current map view

Helpful Hints

- Many layers are scale-dependent, which means that you must zoom in or zoom out for them to become visible.
- Many functions work only on the active layer. To make a layer active, use the button to switch to the Layer List, then click the Active radio button next to the layer that you want to make active.
- There can only be one active layer up at one time.
- Most GIS layers do not overlay/register on the orthophotos accurately. GIS layers are for illustration and general analysis purposes only and are not accurate to surveying or engineering standards. Information is not guaranteed to be accurate, current or complete.

List of Buttons on Toolbar

- Use this to switch between viewing the Legend and the Layer List.

- Either click once on the map or drag a box to define the zoom extent.

- Same as the Zoom in tool, but zooms out.

- Zoom to the full extent of the Map Service, typically the entire County.

- Will zoom in (or out) to fit the current active layer.

Please note: The desired layer must be active in order to zoom to it.

- Will send you back to the previous map scale.

- Click & drag cursor to pan the map.

- Point & click on a feature on the map. The attributes of all layers at the location you clicked will be identified and reported.

Please note: The desired layer must be active in order to query it.

- Drag a box around the features of a layer from which you would like to view attributes. The features of the layer inside the rectangle will be highlighted and attributes displayed. The target layer must be active in order to select it.

- Choose to select features of a layer by line or polygon. The features of the layer intersecting the line or inside the polygon will be highlighted and reported. NOTE: The desired layer must be active in order to select it.

- Clear selected features from the map.

- Type in your desired map title, and click on "Create Print Page."

- Retrieve information about a parcel, and access Guidelines & Standards documents.

- View Metadata for the active layer. Download both Metadata and GIS datasets.

Layer Symbology
To see how layers are symbolized, use the Layers/Legend button to switch to the Legend.

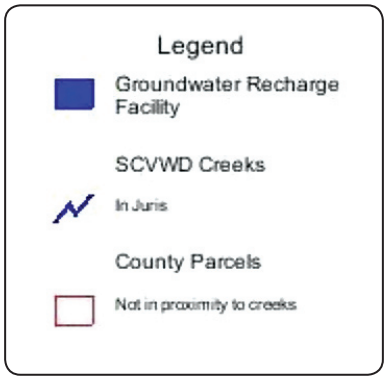

Layer Visibility
To make a layer visible, use the Layers/ Legend button to switch to the Layer List.

In the Layer List, put a check mark in the box next to the layer that you want to make visible. In this example, the GroundWater Recharge Facility, SCVWD Creeks, and County Parcels layers will be visible, but the remaining layers will not be visible.

The Active Layer
Many functions (Zoom to Active Layer, Identify, Query, Search, Parcel Search, Metadata, Select by Rectangle, Select by Line or Polygon) only work on the Active Layer.

Making a Layer Active
To make a layer active, select the radio button next to the layer name. In the example above, the County Parcels layer will be the active layer.

Please note: There can only be one layer Active at any time.

Application Workflow
The typical workflow with this application involves the following steps:

1. Make a layer both active and visible
2. Select a tool to apply to the active layer
3. Click the mouse at a point of interest on the map for tools like "Identify"
4. Click and Drag the mouse to "Pan" or "Zoom"
5. Input information you are prompted for if the tool opens a new window

9.C. NEXT STEPS FOR WEBSITE DEVELOPMENT

As the Water Resource Protection Collaborative starts a new phase of work from September 2005 to February 2007, it is anticipated that the User's Manual for Guidelines and Standards for Land Use Near Streams, as well as the GIS Mapping Tool and related information may be available electronically at a Collaborative website, where information can be more readily available to a wide audience.

GIS Mapping Tool Help:
http://arcview.valleywater.org/WRPC/Help/index.html

CHAPTER 10

BIBLIOGRAPHY

CHAPTER 2 REFERENCES

Dunne T and LB Leopold. 1978. Water in environmental planning. W.H. Freeman and Co. New York, New York.

Harrelson CC, CL Rawlins, and JP Potyondy. 1994.

Stream channel reference sites: An illustrated guide to field technique. Rocky Mountain Research Station, USDA Forest Service. RM-245.

Hedman ER. 1970. Mean annual runoff as related to channel geometry of selected streams in california. USGS Water-Supply Paper 1999-E in cooperation with the CA Dept of Water Resources.

Hedman ER and WR Osterkamp. 1982. Streamflow characteristics related to channel geometry of streams in western united states. USGS Water-Supply Paper 2193.

Leopold LB. 1994. A view of the river. Harvard University Press. Cambridge, MA.

Pleus AE and D Schuett-Hames. 1998. TFW Monitoring program method manual for the reference point survey. Prepared for the Washington State Dept of Natural Resources under the Timber, Fish, and Wildlife Agreement. TFW-AM9-98-002.

Rosgen DL. 1994. A classification of natural rivers. Catena. 22:169-199.

Stream Notes. 1998. Would the real bankfull please stand up!. Stream Systems Technology Center, USDA Forest Service.

VT ANR. 2004. Vermont stream geomorphic assessment: Appendix K, identification of bankfull stage. Vermont Agency of Natural Resources.

Wahl KL. 1977. Accuracy of channel measurements and the implications in estimating streamflow characteristics. USGS – Jour of Research. 5(6):811-814.

CHAPTER 5 REFERENCES

Adopt-A Creek Program brochure

2004 National River Cleanup Day site map

2003 Stewardship for Small Acreages flyer

Streamcare Guide for Santa Clara County

2003 Creek Care mailer

Why do people dump trash in creeks? brochure

Working Around Watercourse brochure

Stewardship Course for Forest Landowners article

Water-Wise House Call program brochure

Urban Creeks Council's Stream Management Program for Private Landowners in Contra Costa County brochure

California Forest Stewardship Program description

Melbourne Water Stream Frontage Management Program description

City of Oakland Clean Creek program web page

Arlington, Texas Creek Care web page

CHAPTER 11

GLOSSARY OF TERMS

WORD	DEFINITION	SOURCE
Active Channel	The channel that contains the discharge where channel maintenance is most effective, sediment are actively transported and deposited, and that are capable of containing most flows. Active channels are located within the area bounded by bankfull stages.	**Leopold**
Active Flood plain	Low lying areas built by watercourse sediment depositions between top of bank that are adjacent to a watercourse and that have been constructed by the present river in the present climate. These areas are susceptible to frequent inundation during moderate and higher flows when the active channel's capacity is exceeded. Active floodplains are most prominent along low-gradient, meandering reaches and are often absent or undistinguishable along steeper sloped stream channels.	**Collaborative, Leopold**
Active Recreation	Includes sports fields, recreation centers, tot lots, play equipment, multi-use courts, etc. Should not be located within riparian area.	**San Jose Riparian Corridor Policy**

WORD	DEFINITION	SOURCE
Bankfull stage	Bankfull stage is the point at which the flow just begins to enter the active floodplain. Accurate measurements have been conducted on gaged streams, however, in absence of historical hydrological records there are a number of field indicators that can be used to identify bankfull stages with a great deal of accuracy: • An abrupt change in the slope of the stream channel, usually from a vertical plane to a horizontal plane on top of the floodplain. • The bankfull stage is usually marked by a change in vegetation such as the change from gravel bars to forbs, herbs, or grasses. Persistent woody vegetation is usually indicative of upland terrain, but can be misleading. • Erosion or scour features. These features indicate areas just below the bankfull stage and are recognized as significant characteristics of stream dynamics. • Flat depositional benches, lateral bars, or point bars, usually created by lateral or downward movement of streams and can create active floodplain areas. • Change in the size distribution of sediment materials at the surface from fine gravel to cobbles, from sand to gravel or even fine gravel material. It can change from fine to coarse or coarse to fine. • Stain lines can indicate frequent inundation of water on rocks. Stain lines may be marked by sediment or lichens.	**Water Resources Protection Collaborative, Leopold**
Base Flood Elevation (BFE)	The base flood elevation is the height of the base flood in relation to a vertical datum. The base flood is a 100-year flood event, which has a one percent or greater chance of occurrence in any given year.	**Collaborative**

WORD	DEFINITION	SOURCE
Development	Any man-made change to improved or unimproved real estate, including but not limited to buildings or other structures, mining, dredging, filling, grading, paving, excavation or drilling operations or storage of equipment or materials.	**California Floodplain Management Ordinance**
Geomorphology (Fluvial)	The study of the natural relationship between a stream and its bank and bed. Forced into an unnatural position, the streambanks and bed will erode. Shaped to match the water flow, the stream remains more stable.	
Habitat	The specific area or environment in which a particular type of plant or animal lives. To be complete, an organism's habitat must provide all of the basic requirements of life for that organism.	**SCVWD**
Hydrology	1. The branch of physical geography concerned with the behavior of water in the atmosphere, on the surface of the earth and underground. 2. The science dealing with the properties, distribution and circulation of water	**USDA NRCS Pullman Plant Materials Center, Pullman, WA and The Habitat Restoration Group of Felton, CA**
Infill	The development of the last remaining lots in an existing developed area, the new development within an area already served by existing infrastructure and service, or the reuse of already developed, but vacant properties.	**Land-Use Lingo: A Glossary of Land-Use Terms by T. A. Holveck, 2001.**
Outside Edge of Riparian Habitat	The riparian edge is the outer boundary of the existing riparian vegetation; for trees, the dripline is the outer boundary.	

WORD	DEFINITION	SOURCE
Redevelopment	Development activity generally characterized by the clearance of existing structures and new construction. The new development may be the same type of land use, or a new type.	**Fairfax County.**
Restoration	The reestablishment of the structure and function of ecosystems. Ecological restoration is the process of returning an ecosystem as closely as possible to predisturbance conditions and functions. Implicit in this definition is that ecosystems are naturally dynamic. It is therefore not possible to recreate a system exactly. The restoration process reestablishes the general structure, function, and dynamic but self-sustaining behavior of the ecosystem.	**SCVWD**
Riparian	1. On, or pertaining to, the banks of a stream. (As in riparian vegetation or riparian woodland.) 2. Pertaining to the banks and other adjacent, terrestrial (as opposed to aquatic) environs of freshwater bodies, watercourses, and surface-emergent aquifers (e.g., springs, seeps, oases), whose imported waters provide soil moisture significantly in excess of that otherwise available through local precipitation - soil moisture to potentially support a mesic vegetation distinguishable from that of the adjacent more xeric upland.	**Warner and Hendrix. Riparian Resources of the Central Valley and California Desert 1985. California Department of Fish and Game.**
Riparian Buffer	Land next to a stream or river that is vegetated, usually with trees and shrubs, that serves as a protective filter for streams. A buffer helps to stabilize stream banks from washing away and to reduce the impact of upland sources of pollution by trapping, filtering, and converting sediments, nutrients, and other chemicals. In addition, a buffer helps supply food, cover, and thermal protection to fish and other wildlife. Riparian buffers can be 300 feet wide or 20 feet wide; it depends on the stream and the land around the stream.	

WORD	DEFINITION	SOURCE
Riparian Vegetation	1. Vegetation which occurs in and/or adjacent to a watercourse. For the purpose of administering Fish and Game Code Section 1600, et seq., this should be expanded to include vegetation adjacent to lakes as well. 2. Vegetation growing on or near the banks of a stream or other body of water on soils that exhibit some wetness characteristics during some portion of the growing season. 3. Vegetation which occurs along watercourses, and is structurally or floristically distinct from nearby, non-streamside vegetation. 4. Riparian vegetation is terrestrial vegetation that grows beside rivers, streams, and other freshwater bodies and that depends on these water sources for soil moisture greater than would otherwise be available from local precipitation.	**Warner, RE. and Hendrix, KM., eds. 1984. California Riparian Systems, Ecology, Conservation, and Productive Management. California Riparian Systems Conference, U.C. Davis. Sept 1981. University of California Press. Berkeley, CA**
Stream/Channel/Creek	A stream is a body of water that flows at least periodically or intermittently through a bed or channel having banks. This may include watercourses having a surface or subsurface flow that supports or has supported riparian vegetation, fish and/or aquatic life. (See appendix for a more detailed description.)	**Collaborative**
Stream bed	The substrate plane bounded by the stream banks over which water moves. Also called stream bottom. It is the area kept mostly or completely bare of vegetation by the wash of water of the stream.	**King County Dept of Public Works 1993**
Stream bank	The portion of the channel cross section that restricts lateral movement of water. A distinct break in slope from the channel bottom.	**King County Dept of Public Works**

WORD	DEFINITION	SOURCE
Toe of Bank	The break in slope at the foot of a streambank where the bank meets the bed. (See section 2.G on page 2.15).	**Collaborative**
Top of Bank	Top of bank designates a stream channel boundary where a majority of normal discharges and channel forming activities takes place. The top of bank boundary will contain the active stream channel, active floodplain, and their associated banks. Top of bank of streams with levees will be delineated on the inner edge of the levee. Where there are no distinguishable features to locate top of bank, the local permitting agency or the Santa Clara Valley Water District will make a determination and document, as appropriate. In the absence of this determination, the 100-year water surface will be used. (See section 2.G on page 2.15).	**Collaborative**
Watercourses within SCVWD Jurisdiction	Those watercourses whose watershed area upstream is in excess of 320 acres as shown in the SCVWD's Watershed Map. These are also mapped on SCVWD GIS map.	

FREQUENTLY ASKED QUESTIONS

1. WHAT IS THE ANTICIPATED BENEFIT/IMPACT ON PROPERTY OWNERS AND THE BROADER COMMUNITY? POSITIVE? NEGATIVE?

The Proposed Guidelines and Standards for Land Use Near Streams (Proposed Guidelines and Standards) are designed to provide clear, consistent guidance to property owners and developers about how to design and construct development projects on streamside parcels. The goal is to help protect Santa Clara County streams and streamside resources.

By achieving this goal, both property owners and local communities will benefit from healthier streams and riparian resources, reduced erosion, more safety for streamside residents and structures, improved flood protection and water quality, and increased property values if trees and streamside amenities are left intact or enhanced.

2. WHEN WILL A PIECE OF PROPERTY/PROJECT BE AFFECTED?

The Proposed Guidelines and Standards apply to land use activities (i.e. building, construction, grading, landscaping subject to development review) associated with new development and redevelopment on parcels adjacent to streams. The Proposed Guidelines and Standards also include some proposed requirements and recommendations for remodels and additions to existing streamside homes that are designed to help protect both the structures themselves as well as stream side resources.

3. WILL THERE BE NEW OR ADDITIONAL REQUIREMENTS FOR STREAMSIDE PROPERTIES?

Yes, there will be some new permit application requirements as well as design and construction requirements.

In terms of the permit application, the applicant will be asked to:

1. Provide information about the size and type of stream on the parcel and describe the types of land use activities proposed in relation to the location of the stream;
2. Describe in the site plan certain existing conditions on site (i.e. bank erosion and flooding) and/or potential streamside impacts related to the development and construction (i.e. removal of riparian vegetation, grading, and drainage over the streambank);
3. Demonstrate how these types of concerns and conditions will be addressed.

In terms of the design and construction requirements, many overlap with or compliment existing stormwater and environmental regulations. They fall into several categories including: protection of riparian habitat, slope stability protection, erosion repair, grading, drainage, outfalls and trail construction. For example, a slope stability protection area varying between 10 to 25 feet, or as otherwise demonstrated by a geotechnical analysis, will need to be maintained to protect people and structures on the site.

4. DO ALL STREAMSIDE LAND USES HAVE NEW REQUIREMENTS?

No, provisions have been made for exempting many types of land use activities from any streamside permit review. Exemptions include:

a. Less then 3 cubic yards of earthwork

b. Interior building construction and alterations

c. Erection of storage buildings not greater than 120 sq. ft.

d. Replacement of sewer or water laterals

e. Re-roofing

f. Wood fences six feet and height or less, or

g. Exterior decks less or equal to 30" above grade

In addition, some communities may elect to exempt existing single-family homes on lots 10,000 square feet or less in size. The exact lot size subject to exemption may vary from community to community.

5. HOW IS IT DIFFERENT THAN EARLIER PROCESSES?

Currently, all proposed activities within 50 feet from a District jurisdictional stream are subject to permit review by the Santa Clara Valley Water District (SCVWD). Many communities, including San Jose, with its Riparian Corridor Protection Policy, and West Valley hillside communities, already regulate much of what is contained in the Proposed Guidelines and Standards. The goal has been to establish County-wide a clear, consistent set of Proposed Guidelines and Standards that enables property owners and developers to know ahead of time what information is required and what types of practices are required/recommended.

From a permitting perspective, the main differences will be that some cities and the County will elect to assume permit authority for streamside activities. This will streamline the permitting process for property owners because you will not need to get a separate permit from SCVWD unless the activity is on or next to SCVWD right-of-way. In addition, the Proposed Guidelines and Standards may be applied to smaller streams typically upstream of the historical SCVWD jurisdiction.

6. HOW DOES THE NEW PERMITTING PROCESS WORK?

Under the new approach, when a property owner files a permit application, the permit agency will screen by assessor parcel number to determine if the proposed land use activity is within a streamside parcel. This is called the 'Streamside Review Area'. If a parcel falls within the Streamside Review Area, then the permitting agency will review the permit application using the Proposed Guidelines and Standards to determine how stream resources can be protected.

7. WILL IT LENGTHEN THE DEVELOPMENT/PERMIT REVIEW PROCESS?

One of the primary objectives has been to provide clarity, certainty and predictability in the related permit review requirements. The goal is to decrease the review time by streamlining the permitting process. In addition to the Proposed Guidelines and Standards are a set of Permitting Tools, such as the “Streamside Resource Protection Questions”. These tools outline what information required and how that information will be used in reviewing the permit application.

8. WILL THE PROPOSED GUIDELINES AND STANDARDS MAKE GETTING A PERMIT MORE EXPENSIVE?

Large developments presently have to adhere to Regional Water Quality Board requirements for stormwater runoff and related water quality protections, so no additional costs will be incurred in most instances to protect the water quality in streams. There will be some additional nominal cost if a consultant is needed to help complete permit applications for large projects. There may be some cost if a geotechnical analysis needs to be done to assure stability of a steep streamside slope or if a large site requires an assessment of biotic resources, but in some cases, these assessments are already required.

9. WHEN WILL THE PROPOSED GUIDELINES AND STANDARDS GO INTO EFFECT?

The SCVWD is starting to revise its Ordinance regulating permit requirements to incorporate the Proposed Guidelines and Standards. It is anticipated that the SCVWD will continue to permit these activities through February 2007 in most cases. At that time, many cities and/or the County will elect to assume the permit authority, and will incorporate provisions in their regulations to address the Proposed Guidelines and Standards.

10. WHAT KIND OF ASSISTANCE CAN I GET?

In some cases, technical assistance may be needed to accurately assess conditions such as the stability of a streambank or the value of streamside resources, similar to requirements contained in the San Jose Riparian Corridor Policy. For more information, contact your local Planning Department or the Community Projects Review Unit at the SCVWD at (408) 265-2607 x 2650.

I. RIPARIAN CORRIDOR PROTECTION

Introduction: An adequate riparian corridor is essential to protect water quality, fish/aquatic life and other biological values, bank stability and other designated beneficial uses. Guidelines and standards related to planting and removal of plants in this section are applicable in conjunction with a development proposal where city/county reviews landscaping plans. Additional efforts to guide the protection of the riparian corridor through the types of plants installed or removed will occur through outreach and educational methods. Guidance for single family additions and remodels is to make site development's relation to the creek in a better condition than existing through such measures as: redirection of drainage to the street, planting of native vegetation, creating a native buffer along the creek edge, increase the setback from the creek, providing erosion protection measures or repair, removing invasive species.

I.A.1 Protection of the Riparian Zone
Enforce existing City/County/SCVWD general plans, policies, or ordinances related to riparian areas, water quality and source water protection.

I.A.2 Protection of the Riparian Zone
City, County and SCVWD to develop criteria to determine allowable uses within riparian corridor and develop measures to protect existing riparian areas. This may require an assessment of onsite biotic and riparian conditions by a qualified expert and consultation with the appropriate resource and regulatory agencies.

I.A.3 Protection of the Riparian Zone
Riparian corridor buffers should be adopted by jurisdictions, as appropriate, consistent with onsite biotic conditions which may be determined a qualified professional to protect existing riparian habitat. Areas adjacent to streams should be considered for future restoration opportunities. Sensitive habitat areas should be identified and assigned appropriate buffers.

I.A.4 Environmental and water quality related to Structures Built Near Streams
Supplement CEQA guidance and checklist to include environmental impacts relative to temperature and water quality for aquatic life.

I.B. Native Plant Removal
Native riparian vegetation is not allowed to be removed (see Design Guide for list of native species).

EXCEPTION: Native riparian vegetation may be removed if there is a threat to public health and safety including an imminent danger of induced flooding. In addition, riparian vegetation may be removed if it will improve the stream ecology or habitat (a biologist/arborist must concur, as required by the permitting agency and recommend referral to SCVWD). If vegetation is proposed for removal in conjunction with a development project, mitigation will be provided as defined through the CEQA process and as agreed to by the local agencies and appropriate regulatory agencies.

I.C. Planting
Non-native species are not allowed to be planted between top of banks, or within an existing riparian corridor. Non-native invasive species are not allowed to be planted adjacent to an existing riparian corridor. Recommend watershed specific natives for major development restoration landscaping. Refer to California Native Plant Society "Guidelines for Landscaping to Protect Vegetation from Genetic Degradation". (www.cnps.org/archives/landscaping.pdf)

EXCEPTION: May be allowed if approved by SCVWD and appropriate state and federal regulatory agencies.

I.C2. Planting
Do not plant invasive species. (see Design Guide for list of invasive species). For single family units, outreach and education materials will be employed to promote use of native plants. Discourage use of listed invasive species and encourage removal of invasive species by providing guidance on invasive species removal techniques. Refer to California Invasive Plant Council plant lists.

I.C3. Planting
Planting appropriate vegetation between top of banks is encouraged as an alternative to hardscape bank protection in locations where flood capacity is sufficient, in order to promote bank stability, improve habitat, and provide other water quality benefits. However, planting efforts should not reduce channel capacity significantly below design flows. This would be regulated as an encroachment between top of banks and assume mature vegetation.

EXCEPTION: See Activity—Encroachment between top of banks.

I.C4. Planting
No trees may be planted on a levee unless additional fill is placed against the levee. See Design Guide for example drawing.

I.C5. Planting
Trees must not be planted within easement or right-of-way of SCVWD water supply pipelines or the minimum required by other jurisdictions, as appropriate.

I.D. Irrigation
Irrigation runoff must not be allowed to cause erosion. If within outboard levee slope, irrigation must be bubbler or drip-type systems, and must be used for establishment purposes only. No main lines may be installed in levees.

I.D2. Irrigation and Planting
Follow efficient water use landscape ordinance requirements for drought tolerant plants and water conservation. Include measures to address stream side planting guidance.

I.E. Pesticide and Herbicide Use
Use of pesticides and delineation of responsibility for maintenance on District property or easements shall be conducted as defined by current practice. Outreach and educational materials will be employed to provide guidance on appropriate pesticide and herbicides for use near aquatic resources as per the District's Integrated Pest Management plan and its presentation of the use of alternatives to pesticides/herbicides when possible.

I.F. Post-Construction Water Quality
Post construction water quality mitigation measures are to be included in the proposed development conditions (see Construction-related Permit Conditions for Streamside Resource Protection in Guidelines and Standards User's Manual).

I.G. Land Uses Next to Riparian Corridors/Streams:
Avoid locating loading docks, trash enclosures, chemical storage areas and stationary noise producing mechanical equipment adjacent next to streams and riparian corridors. These facilities are not allowed in streams.

Refrain from locating new paved areas, active recreational areas, agricultural growing areas and grazing activities within riparian corridors. Refer to Standard Development Requirements for Golf Courses prepared by Santa Clara County for golf courses or large turf areas.
Refer to the Start as the Source (www.scvurppp_w2k.com/basmaa_satsm.htm) and SCVWD's " Streamside Planning" guide for street layout next to streams.

I.H. Light
Avoid bright colors and glossy or glare producing building finishes on structures facing the stream or riparian areas. Avoid nighttime lighting in riparian corridors, direct lighting away from riparian corridor and maximize distance of lighting from riparian corridor.

I.I. Monitoring
For projects subject to mitigation/monitoring requirements, riparian plantings for mitigation and bank repair/protection projects will be monitored to ensure successful establishment.

I.J. Protection of Fish and Aquatic Life
Preserve in and near-stream riparian vegetation whose canopies provide shade and nutrients for aquatic life.

I.J2. Protection of Fish and Aquatic Life
Protect/maintain stream characteristics suitable for fish habitat, including riffles, pools, gravel beds, stable undercut banks, overhanging vegetation & in-stream woody debris.

II. BANK STABILITY/STREAMBED CONDITIONS

A. Slope Stability Requirements for New and Major Redevelopment

Introduction: Slope stability protection area for watercourses will be determined based on geomorphic and hydrologic conditions, the bank's physical characteristics, such as composition and height, the potential for instability or erosion, other environmental considerations, structure loading and flood potential as determined by the applicant's engineer. In addition, construction activities proposed below the top of bank and/or in the riparian corridor are subject to review and permit authorization from the Regional Water Quality Control Board, California Department of Fish and Game (DFG), and in most cases, the US Army Corps of Engineers and their Federal consulting agencies.

The slope stability protection area or trigger is designed to assist permitting staff in identifying those situations in which a proposed structure may threaten bank stability and/or bank instability may threaten the integrity of a structure and the health and safety of its occupants. If a property owner is proposing development/construction within the trigger area, the permitting agency should require further study of soil and slope stability in order to determine whether or not the location of a proposed structure may threaten bank stability and/or bank instability may threaten structures. For banks of larger streams, or for streams that are deeply incised or have highly erodable banks, a permitting agency may need to increase the protection area or trigger area in order to protect water quality and other resources.

II.A. Bank Stability for Structures Built Near Streams
Establish a bank stability protection area or trigger that applies to construction of new roads, parking lots, pools, and structures subject to the UBC. The bank stability protection area or trigger should be measured from top of bank and should be based upon stream characteristics including protection of existing riparian vegetation, natural or modified streams banks, and condition of bank.

For all new development and major redevelopment, the slope stability trigger will be set to be the greater of:

1) 2 to 1 structural slope stability protection area or trigger (This is measured using a hypothetical 2 horizontal to 1 vertical line projected from the toe of bank to a point where it intersects the adjacent ground.) This protection area or trigger would allow for biotechnical methods for slope repair should erosion occur. See Design Guide for explanatory drawing. The protection area should allow for construction access and access around the structure. There may be circumstances where the bank or

channel instability requires a greater no construction area. In these cases, 2:1 may be inadequate to offer protection and to provide room for erosion repair, or;

2) 20 feet from top of bank or property line, whichever is greater

Where the property line falls within the stream, the definition of top of bank will be adopted by municipalities and used to determine protection area or triggers outlined in municipal codes.

For information on the proposed triggers for Single Family Units (SFU's), please refer to slope stability measures packages (Attachment).

For construction proposed within the protection area or trigger area, the applicant would need to conduct a stability analysis by stream type and demonstrate that the development would not require the introduction of hardscape in order to maintain active floodplain or active channel slope. Applicant would also be required to show how maintenance or repair of the stream could be provided. Stability based on stream types described below:

- **EARTHEN BANK STREAM**–geotechnical analysis must be provided considering static soil characteristics, stream dynamics, tractive forces on the slope, and the geomorphic functions of the stream. The improvement must be designed such that it will be supported in the event of bank failure.
- **HARDENED BANK or LINED STREAM**–load analysis must be provided to assure no impacts to the stability of the stream lining.

Other exceptions, such as fences > 6′ high, meeting prescribed design criteria and location relative to stream bank to be developed and included in the Design Guide

II.A.2 Bank Stability for Structures Built Near Streams
Supplement CEQA guidance and checklist to include stream stability impacts from and to proposed development project.

II.B. Flood Protection for Structures Built Near Streams
Structures will meet FEMA requirements if within a special flood hazard area. Refer to SCVWD Watershed Stewardship Plans and verify with SCVWD the status of any planned or anticipated flood protection projects and their right of way requirements. SCVWD may request dedication of land rights for flood protection or maintenance access in conjunction with new or redevelopment projects.

For levee sections, recommend 18 to 25 foot building setback from toe of levee See descriptive drawing in Design Guide

EXCEPTION: Exceptions are allowed as consistent with City or County flood hazard ordinances.

III. BANK STABILITY/STREAMBED CONDITIONS

B. Slope Stability Requirements for Single Family Units

The Purpose of Slope Stability Requirement For Single Family Units: Structures built near streams may negatively affect streams and streamside resources as well as the structure itself. Some potential issues include:

1. Adverse effects on streamside slopes, including effects on slope stability and erosion, and related hazards to structures built on streamside properties
2. Adverse effects on flood control facilities and related infrastructure

3. Adverse effects on local drainage facilities and related infrastructure
4. Adverse effects on riparian corridors and associated vegetation and related erosion impacts
5. Adverse effects to streams, including the effects of down-slope sedimentation and altered stream hydrology, and related impacts to water quality in streams
6. The structure itself can be undermined over time as the streambank erodes due to the dynamic nature of the stream resulting in health and safety hazards

The following Slope Stability Requirements are intended to serve as development standards, that when used, will help enable the location of structures on streamside properties in a manner that avoids or minimizes impacts to streams, streamside natural resources, flood control facilities, local infrastructure and the structure itself.

Slope Stability Requirements as a' Geotechnical Trigger' for Permit Review
If a structure is proposed to be located closer to the Top of Bank than indicated by the following Slope Stability Requirements, this may serve as a trigger for local permitting agencies to require site-specific technical information related to precise slope conditions. If a property owner is proposing to place structures closer to a streamside slope than allowed by the Slope Stability Requirements, the permitting agency should require further study of on-site geotechnical soil and slope stability conditions. The purpose of the study is to determine:

1. whether or not the location of a proposed structure may threaten bank stability, and
2. whether or not the bank instability may threaten structures and/or potentially cause a health and safety hazard.

For banks of larger streams, or for streams that are deeply incised or have highly erodable banks, a permitting agency may need to require on-site geotechnical analyses even if the Slope Stability Requirement are met.

II.C Slope Stability Protection Area for Single-Family Units[1]
The "Slope Stability Protection Area" is a no build area between a structure and the stream[2]. In some cases, a range of numbers is indicated. The assumption is that each local jurisdiction will select one of the numbers based on their existing priorities, permitting processes, and on-site conditions. It is also assumed that the channel depth of most streams in urban Santa Clara County is 10 feet deep or less. For streams, deeper than 10 feet, there should be a 2 to 1 protection area as measured from the toe of the bank.

	Stream with Little or No Hardening	Structurally [3] Engineered System	Ephemeral Stream
Size of Protection Area (as measured from Top of Bank)[4]	25 - 20 ft.	15 ft.	10 - 15 ft.

Note: Potential Additions to the Slope Stability Protection Area

2. For a large lot (greater than 10,000 sq. ft), add 5 feet.
3. For a large home in which the FAR triggers a discretionary review, work with applicant to ensure that impacts such as drainage are redirected away from a stream and pursue opportunities to increase the slope stability protection area to better protect the stream (and home) from impacts. For example, consider decreasing the required front yard setback in order to accommodate an increased rear yard setback/slope stability area.

III. Encroachments between the Top of Bank (e.g. bridges,retaining walls)
Introduction: In addition to the G&S's below, any construction activities proposed below the top of bank are subject to review and permit authorization from the Regional Water Quality Control Board, California Department of Fish and Game, and in most cases, the US Army Corps of Engineers and their Federal consulting agencies.

III.A.STANDARD: Overhang Top of Bank
Decks, pathways, buildings or any other structures (excluding road crossings, outfalls, and bank protection structures) may not overhang or encroach beyond or within the top of bank. When illegal structures are identified, which cause public health and safety problems and/ or damage to stream resources, appropriate jurisdiction should take actions to have them removed or modified.

III.B1. Design/Construction Related to Encroachments between the Top of Bank
The construction of clear span structures is preferred for new and replacement bridges. Bridge piers may be allowed if length of span makes clear span infeasible as determined by the local jurisdiction. If bridge piers are used they should be pier walls or large diameter (4') piers and if feasible not be placed in the active channel (see definition in Glossary).

III.B2. Design/Construction Related to Encroachments between the Top of Bank
If a structure must be placed in the active channel (See definition in Glossary) due to structural requirements, feasibility, or otherwise, a geomorphic, biological impacts, and/or hydraulic analysis will be required. SCVWD must be consulted and it will usually require a Streambed Alteration Agreement (SAA), Regional Water Board Water Quality Certification, US Army Corps authorization, and other state and federal approvals. For construction of new bridges, loss of riparian, or aquatic habitat beneath the bridge should be mitigated and located as close to the new bridge as possible.

III.B3. Design/Construction Related to Encroachments between the Top of Bank
Have footings and pile caps that are designed based on channel scour to prevent erosion. The appropriate foundation depth should be determined by a licensed engineer and should be at minimum three (3) feet below active channel invert.

If depth of waterway allows, clearance under the bridge should be a minimum 12 feet for maintenance access or access to the stream should be provided from road.

[1] Single Family Unit refers to both (a) new single family units on existing lots of record and (b) new single family remodels/rebuilds as defined by local regulations/policy/ guidelines.
[2] In addition to protecting this area, BMP's should be used that are reflective of Guidelines and Standards, for activities adjacent to this areas where discretionary review is used (i.e redirecting drainage away from the stream and no removal of native riparian plants.
[3] A "structurally engineered system" is designed to provide slope stability. It may be a concrete-lined channel (U-frame or trapezoidal) or a stream substantially modified with riprap, gabions, structurally engineered sacked concrete, etc.
[4] Area measured for Slope Stability Requirement to be measured based on location of Top of Bank, whether stream is on or off of property.

III.B4. Design/Construction Related to Encroachments between the Top of Bank
Structures must not reduce the active channel or active floodplains' conveyance area or redirect flow to the detriment of another bank or the river bed. Designs in SCVWD jurisdictional areas must be capable of conveying 100-year design flow and meet SCVWD's freeboard requirements explained in Design Guide.

EXCEPTION: If structure may reduce the conveyance area or encroach into freeboard area, a hydraulic analysis will be required to demonstrate no increase in erosive velocity or flood elevations. Hydraulic analysis must be in HECII or HEC-RAS format (small rural streams may utilize simpler hydraulic analysis methods) and must model debris loading on piers (3 times the pier width) and include a scour analysis. Analysis must be acceptable to SCVWD.

III.B5. Design/Construction Related to Encroachments between the Top of Bank
Encroachments in active channels and active floodplains must provide for fish passage and not impact aquatic life.

EXCEPTION: Consideration of exceptions for fisheries impacts must be coordinated with NMFS, USFWS, CDFG, RWQCB and would require biological impacts analysis as well as a Streambed Alternation Agreement.

III.C. Water Rights Related to Encroachments between the Top of Bank
SCVWD permits required for diversion of surface water (removal of water from stream) in areas where District releases water to stream. Construction-related water diversions must also conform to DFG water diversion guidelines, and are subject to a biological assessment.

EXCEPTION: Stream owners may have riparian rights to water in stream. Owners must file statements with State Water Resources Control Board.

V. EROSION PREVENTION AND REPAIR - PROPOSED GUIDELINES AND STANDARDS

Introduction: Any project that may impact a watercourse requires at minimum notification to DFG and the Water Quality Control Board, and may require an Streambed Alteration Agreement (SAA) and/or a water quality certification. Notification to the Corps, NOAA, and USFWS would depend on the activity and jurisdiction.)

IV.A. The potential for erosion needs to be evaluated and steps must be taken to eliminate or significantly reduce the chance of erosion for each proposed project. Where known, the root cause and extent of any erosion must be identified, described and reported to the appropriate agency or agencies prior to any attempts to repair erosion sites so that the actual source of the problem can be corrected. All repair project proposals should include an evaluation for the potential impacts on both downstream and upstream banks.

IV.B. Erosion Design/Construction

a. Remediate source of erosion if onsite ie, roof downspouts or overbank drainage.

b. Design of erosion protection must utilize the softest possible method appropriate for the stream characteristics. This would range from biotechnical (using watershed specific native vegetation) slope protection techniques to hybrid slope protection such as vegetative slope with rock boulders at toe.

c. Use of hardscape materials like rock or concrete should be avoided. If used, hardscape elements will require project proponents to mitigate impacts by planting appropriate native riparian vegetation onsite or at another suitable location. Mitigation requirements will need approval by regulatory agencies.

d. Retaining walls placed within the banks of the watercourse for development or erosion repair should be discouraged (Refer to Design Guide for options on erosion repair techniques and SCVWD Stream Maintenance Program).

EXCEPTION: In some instances, constructability may be used as justification to select another method. But it must be demonstrated that all softer methods have been evaluated and that any proposed method will reduce erosion and not cause erosion or negatively impact proper **stream function in other areas.**

IV.B2. Erosion Design/Construction: Cutoff walls or keys used for bank protection and erosion repairs should be designed anticipating scour depth. Must be a minimum of 3 feet deep.

IV.B3. Erosion Design/Construction:

a. If erosion protection extends into active channel, evaluate post construction erosion potential due to change in stream dynamics caused by design. This can be done through hydraulic analysis in combination with tractive force or allowable velocities.

b. Channel repairs should match the contour of the upstream and downstream banks to prevent constrictions and increased potential for erosion.

c. Over-steepened banks should be laid back to a more stable configuration whenever possible.

EXCEPTION: Exceptions to hydraulic analysis requirements are allowed for small repairs (generally less than 20 feet in channel length) but review by the District and appropriate regulatory agencies will help determine whether smaller repairs have the potential to negatively impact the stream

IV.B4. Erosion Design/Construction: Evaluate flood potential if the repair method reduces stream cross-section or increases stream roughness a hydraulic analysis is required to demonstrate no increase in flood elevations (flooding on adjacent properties or reduction in minimum freeboard requirement). District should be consulted to ascertain whether there are channel reaches that have sufficient freeboard to accommodate vegetation without a full hydraulic analysis. This may help facilitate the use of vegetation and reduce the burden on homeowners. Hydraulic analysis must be in HECII or HEC-RAS format (exceptions may be made for small rural streams).

IV.B5. Erosion Design/Construction:
For construction, require implementation of erosion and sediment control measures. (See the "Erosion and Sediment Control Field Manual" developed by the Water Quality Control Board.)

Bare earthen slopes resulting from work must be treated to minimize erosion and prevent sediment from entering streams and other aquatic habitats. See Design Guide for recommendations for seed mixes to be used with/without native plants.

EXCEPTION: In general, all bare earth slopes must be treated to prevent erosion and control sediment. Exceptions can be allowed on bare earth slopes if it can be shown that the bank will not erode or runoff/sediment will not go to the stream or other aquatic habitats.

VI. GRADING

Introduction: In addition to the G&S's below, grading activities proposed below the top of bank and/or in the riparian corridor are subject to review and permit authorization from the Regional Water Quality Control Board, California Department of Fish and Game, and in most cases, the US Army Corps of Engineers and their Federal consulting agencies.

V.A. Drainage Related to Grading
Grading must address drainage. Drainage that avoids the need for outfalls, or reduces the size and/or number or outfalls is encouraged. See outfalls and drainage section and Design Guide for grading options next to streams.

EXCEPTION: See outfalls and drainage section for explanation of exceptions.

V.B. Construction Related to Grading
Grading adjacent to streams must be in compliance with NPDES general permit, where applicable, but must at a minimum provide for buffer areas and vegetated swales between the stream and graded areas. As appropriate, follow the SCVURPPP BMPs for construction activities, as contained in "Blueprint for a Clean Bay", and the "California Storm Water Best Management Practice Handbook for Construction.

In compliance with the statewide General Permit for Construction, grading activities that disturb one acre or more of land require the project proponent to prepare and have on site a Storm Water Pollution Prevention Plan. Contact the Regional Water Quality Control Board for details.

EXCEPTION: Exceptions are allowed per each municipality's drainage ordinance and NPDES permits. Exceptions from swale and BMP's are allowed if there are other run-off controls in place to protect water quality.

V.B.2. Construction Related to Grading
Recommend that fill be placed adjacent to dry side of the levee to minimize the levee height. (see example in Design Guide)

EXCEPTION: Fill not recommended if it causes drainage problems, disturbs wetlands, creates safety concerns, or impacts aesthetics of property.

V.B.3. Construction Related to Grading
Modifications to levees are allowed if a slope stability analysis is performed and any structure that provides support to the levee is designed with long-term life span (50-100 years).

EXCEPTION: Exceptions are allowed (although discouraged) to cuts in levees if for a temporary purpose and repair is completed by the beginning of October and a performance bond is used to assure completion.

V.B.4. Construction Related to Grading
Grading adjacent to drinking water reservoirs (Calero, Anderson, Lexington, Coyote, Almaden) must be acceptable to the District, which may require water quality monitoring depending on project's potential for adverse impacts. Consider protective measures in source water protection zones and sensitive areas of reservoir watersheds. See Section I. Erosion and sediment control measures are required to prevent sediment contribution from the construction area to the reservoir.

VII. OUTFALLS, PUMP STATIONS AND SITE DRAINAGE

Introduction: A discharge to a watercourse requires notification to DFG, RWQCB, and Corps.

VI.A. Site Drainage

1. Runoff must not be directed across stream watershed boundaries as a result of grading or through storm drain system design.
2. Direct site drainage through vegetated areas or stilling basins prior to discharge or collection in storm drain system. No concentrated overbank drainage is allowed (e.g. roof overhangs or downspouts). If overbank drainage will occur, use vegetative buffer strips or direct drainage to landscaped areas. Follow Efficient Water Use Landscape Ordinances to minimize runoff.

VI.B. Outfalls
Prefer that there are no new outfalls, However, if there is no way to avoid new outfalls then the following applies:

1. Minimize the number of outfalls.
2. New channel outfalls must conform to the local municipality's drainage master plan.
3. Slope protection for outfalls must meet SCVWD minimum engineering standards using softer slope protection methods if possible (see Design Guide). Outfalls should not overhang the bank or bed as this can lead to excessive channel erosion.
4. Minimum diameter is 12 inches and discharge must be oriented downstream and pipe invert should be at least 2 feet above the stream bottom in areas where sediment deposition is anticipated.
5. Flap gates will be installed when 100-year water surface is above adjacent ground at inlet. Outfalls with flap gates require dormers or similar designs to isolate the flap gate and keep them out of flow area (see Design Guide).
6. Outfalls on federal projects (Coyote Creek downstream of Montague Expressway, Guadalupe River downstream of Blossom Hill, Llagas Creek downstream of Buena Vista, and Uvas Creek downstream of Santa Teresa) must be submitted to SCVWD to coordinate federal review and approval.
7. In conjunction with new or redevelopment, abandoned outfall pipes and slope protection must be removed and the stream bank restored to similar condition existing upstream and downstream of site.
8. Permits are needed from Dept of Fish and Game, U.S. Army Corps, and RWQCB. See Design Guide.

VI.B2. Outfalls Discharge must not pollute receiving water or cause channel erosion. Non storm water discharges not already subject to existing NPDES requirement will be subject to approval and permit from RWQCB.

VI.C1. Storm Drainage Pump Stations
Limit pump discharges to the extent feasible during peak flows to minimize potential impacts from flooding. When a development requires a storm drain pump station that discharges to a stream, require discharge management plan that addresses pump operation during high water (flood) events. See Design Guide for list of criteria needed to prepare a discharge management plan.

VIII. CHANNELIZATION

VII.A. Undergrounding Creeks
Watercourses must not be buried or put into culverts. The exception for culverts only is for road crossings though they should be clear-span whenever possible

If culverts are used they must carry the bankfull flow, accommodate a modified floodplain drainage and where feasible accommodate a 100 year flow rate. This is accomplished with multi-stage culverts with cross-sections designed to carry different flows. Regional debris or sediment basins that will be owned or maintained by SCVWD must be designed for 50-year sediment capacity.

Filling creeks to accommodate grading and construction for developments is not permissible until impact avoidance and minimization efforts are maximized. In the event that impacts are determined to be unavoidable, adequate mitigation must be proposed.

EXCEPTION: CEQA document must be prepared to provide mitigation for impacts of burying stream and appropriate regulatory agency permits, such as a Streambed Alteration Agreement (SAA) must be obtained. The city/county storm drain system, whether in pipes or roadside ditches, is not included in this standard.

VII.B. Open Channel Modification
For modifications to open channels the following applies:

1. The design must consider stream dynamics and induced flooding. A hydraulic analysis as described in Section II acceptable to SCVWD will be required.
2. Recommend restoration of natural stream processes if possible.
3. Impacts to habitat must be avoided or mitigated.
4. Stream conveyance area must be designed for 100-year design flow with freeboard, if along a SCVWD jurisdictional area.
5. SCVWD will request dedication of right-of-way for stream modification projects, including an 18-22 foot wide maintenance area.
6. Notification and securing of appropriate state and regulatory permits, such as a SAA.

EXCEPTION: If active channel and floodplain will not contain the design 100-year flow, then the design can be based on existing capacity with the allowance for providing additional active floodplain width in the future to contain the design 100-year flow. Streams to be dedicated to SCVWD must include an 18-22 foot wide maintenance area. In addition, flood capacity less than the 100-year flow is acceptable if the community in the flood zone is willing to accept less protection and ongoing flood insurance requirements.

IX. UTILITY ENCROACHMENTS

Introduction: In addition to the G&S's below, such encroachments may require other State and Federal permits such as a Streambed Alteration Agreement (SAA).

A. Longitudinal (parallel) encroachments. Longitudinal (parallel) encroachments are not allowed in SCVWD right-of-way.

EXCEPTION: Longitudinal encroachments are discouraged and may only be considered with demonstration that all other alternatives have been considered, there is a benefit to SCVWD and future removal will not be necessary considering SCVWD interests. No water pipelines may be installed within a levee.

B. Utilities Crossings

1. Utility pipes or conduits must go under the stream or be in or attached to the downstream face of a bridge and must go under any levees. Provide locations for future utility crossings in design of new or replacement bridges.
2. Any utilities under the stream must be concrete encased or placed in sleeve.
3. Borings must be 5 feet below lined channels and 8 feet below unlined channels. Recommend under-channel utilities be installed by directional bore.
4. For cut and cover, clearance must be a minimum of three (3) feet and based on scour depth and replacement of fill in levees is subject to SCVWD specifications.
5. Any aerial utility crossings (e.g. PG&E and phone lines) meet minimum OSHA vertical clearance criteria. (22 feet for non-power lines, 26 feet for power lines less than 600 volts, 30 feet for power lines from 600 to 50,000 volts) to allow safe use of maintenance equipment.
6. Crossings of treated (potable and recycled) water pipelines must meet Department of Health Services clearance requirements. (see Design Guide for standards for crossings of SCVWD pipelines and City/ County requirements for other pipeline clearances)
7. Directional drilling projects using bentonite or other lubricants to go beneath or near streams and aquatic habitats will require development of a fracout prevention and response plan describing how water quality will be protected in the event of fracout

EXCEPTIONS: If not feasible to go under or attach to the downstream face of bridge, the utility crossing may be located on the upstream face of bridge if the design would not catch debris, would be capable of surviving impacts from floating debris in high flow and would not hinder emergency debris removal or maintenance operations.

IX. TRAIL CONSTRUCTION

IX.A. Design/Construction Related to Trail Construction
Joint Use Pedestrian/Bicycle Paths are encouraged along creeks. Trails must be located so as to avoid impacts to the stream and riparian areas. Paved multi use trails should be placed so as to maximize distance from stream and riparian areas. Construction must not require deep excavation within tree root zones.

- Minimize trail alignments and footprints and locate them at a distance from streams that will best protect stream and riparian resources.
- Trail projects will not result in negative impacts to riparian areas or streams.

EXCEPTION: Exceptions may be allowed if impacts are addressed and determined to be unavoidable in a CEQA document and approved by appropriate regulatory agencies.

IX.A2. Design/Construction Related to Trail Construction
Design must be consistent with the Santa Clara County Parks and Recreation Department's Interjurisdictional Trail Guidelines (Appendix X). Night lighting of trails along riparian corridors should be avoided.

EXCEPTION: Exceptions may be allowed if impacts are addressed and mitigated in a CEQA document and approved by appropriate regulatory agencies.

IX.A3. Design/Construction Related to Trail Construction
Memorial plaques along trail corridors on SCVWD right of way are subject to jurisdiction review and approval.

EXCEPTION: With appropriate planning and community contribution, a memorial area recognizing community members will be considered.

IX.B. Trails on SCVWD right of way require an agreement that defines maintenance, management, and liability responsibilities of facilities.

X. SEPTIC SYSTEMS

X.A. Design Of Septic Systems
Follow requirements of RWQCB or Santa Clara County as applicable including: Leach field setback 100′ from top of bank, 50′ from swale, 200′ from high water mark of reservoir, prohibited in 10 year floodplain or areas observed to flood from field observations. Consult with SCVWD to determine whether land feature is an active floodplain or swale and assist in determining high water marks at reservoirs.

EXCEPTION: Exceptions or variances are allowed per RWQCB or Santa Clara County requirements. Please note that since 10 year floodplain maps do not exist, any area of historical flooding should be assumed to be in the 10-year floodplain.

XI. Trash Control and Removal

XI.A. Locate trash bins away from streams and follow other measures outlined in NPDES guidance.

XII. PROTECTION OF WATER QUALITY

XII.A. Water Quality
Cities, County, and SCVWD should comply with applicable provisions of stormwater permits, such as C.3.i. of SCVURPPP's stormwater permit (Water Board Order No. 01-119) and/or Stormwater Phase II regulations. Implement Infiltration Guidelines in the SCVRPPP C.3 handbook. Retention ponds and infiltration trenches that do not meet guidelines will be reviewed by the SCVWD and the Regional Water Quality Control Board.

XIII. GROUNDWATER PROTECTION

XIII.A. Groundwater
Require groundwater resource assessments (See Design Guide) when potential for significant groundwater supply or groundwater quality impacts. The changes in land use where these impacts may be significant are anticipated to be subject to CEQA

XIII.A2 Groundwater
To protect Santa Clara County groundwater recharge areas, new high risk activities defined by DHS should be prohibited in well head protection areas as designated on District GIS Maps. Manage (limit, monitor and implement best management practices) existing high-risk activities in recharge areas of basin (District GIS maps area available).

XIII.A3. Groundwater
The owners must show any existing wells on the plans. The wells must be properly registered with the SCVWD and either be maintained or destroyed in accordance with SCVWD standards. Property owners or their representative must contact the SCVWD's Wells and Water Production Unit for more information regarding well permits and registration or destruction of any wells.

XIV. FLOOD PROTECTION

XIV.A. Flooding Protection
For development within special flood hazard zones A, AE, AH, AO, the project must comply with FEMA requirements as implemented by the City or County. Consider when and how to recommend increased levels of protection as described in Dept of Water Resources Model Floodplain Ordinance, recommendations of California Floodplain Management Task Force (Dec 2002), and SCVWD's Community Rating System Program.

EXCEPTION: Exceptions or variances allowed per City or County Ordinances, Policies, or other implementation documents.

XIV.A2. Flooding Protection
In zone A (areas where base flood elevations have not been determined) require a hydraulic analysis to determine the base flood elevation for subdivisions greater than 5 acres or 50 lots whichever is lesser. For other construction and substantial improvements, utilize any other available base flood elevation data as criteria for meeting NFIP requirements. Refer to FEMA publication "Managing Floodplain Development in Approximate Zone A Areas".

EXCEPTION: Not required for existing homes/non-substantial improvements.

XIV.A3. Flooding Protection

If a proposed project will result in a significant increase in land use density[1] (i.e. an agricultural area changes to residential or industrial), the local jurisdiction should work cooperatively with SCVWD to determine (1) what information is needed on a project specific basis to evaluate potential increases in flood flows and (2) what mitigation measures can be implemented to mitigate for impacts to flood conveyance capacity and/or flood protection.

For example, in terms of information and analysis needs, a hydrologic analysis may be needed to identify the impacts (water surface increases cannot exceed 0.1 foot) so that flooding will not increase and improved flood protection facilities will maintain the minimum freeboard requirements). SCVWD will provide technical assistance in the form of existing hydraulic model runs where available, and hydrologic information.

In terms of possible mitigation options, detention basins may be used to mitigate the impact, but they must be properly designed (see Design Guide) and maintained. Design should be in concert with hydromodification facilities and consider regional solutions. SCVWD can also provide technical assistance regarding mitigation actions.

XIV.A4. Flood Protection

For major developments near streams subject to CEQA review that are compatible with the General Plan utilized for developing District hydrology and FEMA floodmaps, development must not, increase site runoff so as to increase depth (0.1 foot increase in water surface) or lateral extent of flooding or increase discharge in local streams as outlined in the storm water permit for the SCVURPPP. A hydraulic analysis prepared by registered civil engineer demonstrating that any flood impacts will not be created is required.

[1] The District's hydrology and design flood flow rates were developed in the late 1970's using the land use designations shown on General Plans in place at that time. These flow rates have recently been updated, but the impact has not yet been analyzed. In general, the changes in land use that could significantly impact runoff quantities are typically those outside the urban service area, in south county and those developments where the change in land use will be subject to CEQA review. The impacts to be addressed are to flood conveyance facilities designed using 1978 (or prior) flow rates and built to provide 100 year flood protection and impacts to flood prone areas which were also determined using the 1978 flow rates.

SLOPE STABILITY REQUIREMENTS FOR SINGLE-FAMILY UNITS ON STREAMSIDE PROPERTIES

(Ratified by the Water Resources Protection Collaborative on April 28, 2005)

The Purpose of Slope Stability Requirements

Structures built near streams may negatively affect streams and streamside resources as well as the structure itself. Some potential issues include:

1. Adverse effects on streamside slopes, including effects on slope stability and erosion, and related hazards to structures built on streamside properties
2. Adverse effects on flood control facilities and related infrastructure
3. Adverse effects on local drainage facilities and related infrastructure
4. Adverse effects on riparian corridors and associated vegetation and related erosion impacts
5. Adverse effects to streams, including the effects of down-slope sedimentation and altered stream hydrology, and related impacts to water quality in streams
6. The structure itself can be undermined over time as the streambank erodes due to the dynamic nature of the stream resulting in health and safety hazards

The following Slope Stability Requirements are intended to serve as development standards, that when used, will help enable the location of structures on streamside properties in a manner that avoids or minimizes impacts to streams, streamside natural resources, flood control facilities, local infrastructure and the structure itself.

SLOPE STABILITY REQUIREMENTS AS A 'GEOTECHNICAL TRIGGER' FOR PERMIT REVIEW

If a structure is proposed to be located closer to the Top of Bank than indicated by the following Slope Stability Requirements, this may serve as a trigger for local permitting agencies to require site-specific technical information related to precise slope conditions. If a property owner is proposing to place structures closer to a streamside slope than allowed by the Slope Stability Requirements, the permitting agency should require further study of on-site geotechnical soil and slope stability conditions. The purpose of the study is to determine:

(1) whether or not the location of a proposed structure may threaten bank stability, and

(2) whether or not the bank instability may threaten structures and/or potentially cause a health and safety hazard.

For banks of larger streams, or for streams that are deeply incised or have highly erodable banks, a permitting agency may need to require on-site geotechnical analyses even if the Slope Stability Requirement are met.

SLOPE STABILITY REQUIREMENTS FOR SINGLE-FAMILY UNITS[1] ON STREAMSIDE PROPERTIES

1. Does the Slope Stability Requirement Apply?

	Stream on Property	Stream not on Property
Permit required is ministerial.[2]	Yes	Yes
Permit required is discretionary.	Yes	Yes

2. Slope Stability Protection Area (if not exempt)

The "Slope Stability Protection Area" is an area between a structure and the stream[2]. In some cases, a range of numbers is indicated. The assumption is that each local jurisdiction will select one of the numbers based on their existing priorities, permitting processes, and on-site conditions. It is also assumed that the channel depth of most streams in urban Santa Clara County is 10 feet deep or less. For streams, deeper than 10 feet, there should be a 2 to 1 protection area as measured from the toe of the bank.

	Stream with Little or No Hardening	Structurally [3] Engineered System	Ephemeral Stream
Size of Protection Area (as measured from Top of Bank)[4]	25 – 20 ft.	15 ft.	10 - 15 ft

3. Potential Additions to Slope Stability Protection area

a) For a large lot (greater than 10,000 sq. ft), add 5 feet.

b) For a large home in which the FAR triggers a discretionary review, work with applicant to ensure that impacts such as drainage are redirected away from a stream and pursue opportunities to increase the slope stability protection area to better protect the stream (and home) from impacts. For example, consider decreasing the required front yard setback in order to accommodate an increased rear yard setback/slope stability area.

---

[1] Single Family Unit refers to both (a) new single family units on existing lots of record and (b) new single family remodels/rebuilds as defined by local regulations/policy/ guidelines

[2] In addition to protecting this area, BMP's should be used that are reflective of Guidelines and Standards, for activities adjacent to this areas where discretionary review is used (i.e redirecting drainage away from the stream and no removal of native riparian plants

[3] A "structurally engineered system" is designed to provide slope stability. It may be a concrete-lined channel (U-frame or trapezoidal) or a stream substantially modified with riprap, gabions, structurally engineered sacked concrete, etc.

[4] Area measured for Slope Stability Requirement to be measured based on location of Top of Bank, whether stream is on or off of property.